This is a digital copy of a book that was preserved for generations on library shelves before it was carefully scanned by Google as part of a project to make the world's books discoverable online.

It has survived long enough for the copyright to expire and the book to enter the public domain. A public domain book is one that was never subject to copyright or whose legal copyright term has expired. Whether a book is in the public domain may vary country to country. Public domain books are our gateways to the past, representing a wealth of history, culture and knowledge that's often difficult to discover.

Marks, notations and other marginalia present in the original volume will appear in this file - a reminder of this book's long journey from the publisher to a library and finally to you.

Usage guidelines

Google is proud to partner with libraries to digitize public domain materials and make them widely accessible. Public domain books belong to the public and we are merely their custodians. Nevertheless, this work is expensive, so in order to keep providing this resource, we have taken steps to prevent abuse by commercial parties, including placing technical restrictions on automated querying.

We also ask that you:

+ *Make non-commercial use of the files* We designed Google Book Search for use by individuals, and we request that you use these files for personal, non-commercial purposes.
+ *Refrain from automated querying* Do not send automated queries of any sort to Google's system: If you are conducting research on machine translation, optical character recognition or other areas where access to a large amount of text is helpful, please contact us. We encourage the use of public domain materials for these purposes and may be able to help.
+ *Maintain attribution* The Google "watermark" you see on each file is essential for informing people about this project and helping them find additional materials through Google Book Search. Please do not remove it.
+ *Keep it legal* Whatever your use, remember that you are responsible for ensuring that what you are doing is legal. Do not assume that just because we believe a book is in the public domain for users in the United States, that the work is also in the public domain for users in other countries. Whether a book is still in copyright varies from country to country, and we can't offer guidance on whether any specific use of any specific book is allowed. Please do not assume that a book's appearance in Google Book Search means it can be used in any manner anywhere in the world. Copyright infringement liability can be quite severe.

About Google Book Search

Google's mission is to organize the world's information and to make it universally accessible and useful. Google Book Search helps readers discover the world's books while helping authors and publishers reach new audiences. You can search through the full text of this book on the web at `http://books.google.com/`

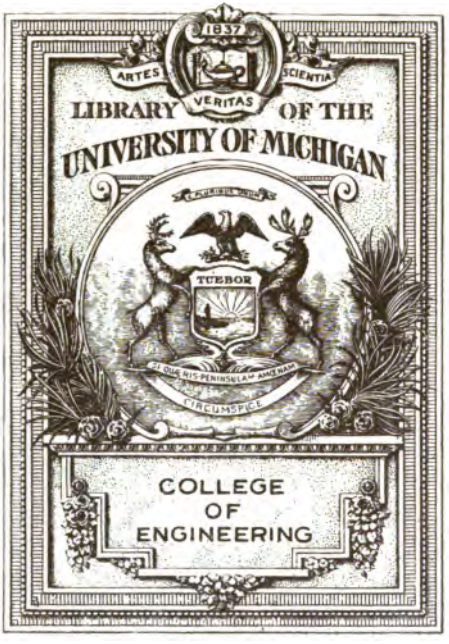
1837
ARTES
VERITAS
SCIENTIA
LIBRARY OF THE
UNIVERSITY OF MICHIGAN
TUEBOR
CIRCUMSPICE
COLLEGE
OF
ENGINEERING

TA
1
.M3

TRANSACTIONS,

1902.

PUBLISHED BY THE ASSOCIATION.

MANCHESTER
HERALD & WALKER, PRINTERS, POOL FOLD CHAMBERS, OFF CHAPEL WALKS.
1903.

CONTENTS.

1902.

	PAGE.
Index	—
Inaugural Address by the President, E. G. Constantine	1
High-pressure Gas Lighting, by Jos. Nasmith . .	17
The Application of Portable Machine Tools, by J. R. Ingham	45
Efficiencies of Electric Cranes, by R. Matthews . .	57
Silo Granaries for Modern Flour Mills, by J. Whitaker	85
The Design and Manufacture of Milling Cutters, by S. N. Brayshaw	117
Steam Pipes, by C. E. Stromeyer	145
Modern Production of Boiler Draught and its Influence on Fuel Consumption and Steam Production, by W. L. Sutcliffe	161
The Design and Construction of Modern Engineering Workshops, by J. H. Humphryes . . .	205
Annual Report of Council, 1902	—

Engin. Lib
Engin.
Sutton
4-2-27
14467

INDEX.

1902.

ADAMSON, D., remarks on Electric Cranes, 73.—Boiler Draught, 187.

ADDRESS OF PRESIDENT, E. G. Constantine, Apprentices, 1.

ANNUAL REPORT OF COUNCIL, 1902: Additions to Membership, III.—Superannuation Fund, III.—Deaths, III.—Resignations, IV.—Erasures, IV. Social Gatherings and Excursions, IV.—Adoption of the Revised Rules, IV.—Tests with new Tool Steels for High-speed Cutting, V.—Communication from the President, offering sum of £150 for the provision of a Gold Medal annually for presentation to readers of Papers, V. and VI.—Papers read, VI.—Anniversary Dinner, VII.—Opening of the Discussion Session: Visit to British Westinghouse Works, XI.—Library, XIII.—Report of Excursion, XIV.—Obituary: Samuel Dixon, XVI.—W. Fletcher, XVII.—A. Hollings, XVII.—W. Holmes, XVII.—H. Johnson, XVII.—A. Muir, XVIII.—J. Robinson, XIX.—J. Schofield, XX.—T. Shaw, XX.—W. Vickers, XX.—Treasurer's General Cash Account, XXI.—Superannuation Fund Account, XXII.—The President's Gold Medal Fund, XXIII.

ASHFORD, J., remarks on Construction of Modern Workshops, 229.

BARTLAM, J., remarks on Induced Draught, 185.

BICKERTON, H. N., remarks on Gas Lighting, 37.

BOILER DRAUGHT, MODERN PRODUCTION OF: Paper on, by W. L. Sutcliffe, 161.

BOSWELL, SAM., remarks on Portable Machine Tools, 52.—Steam Pipes, 152.—Boiler Draught, 180.

BRAYSHAW, S. N., Paper on Design and Manufacture of Milling Cutters, 117.

BUTTERWORTH, J., remarks on Steam Pipes, 153.

INDEX.

CARTER, —, remarks on Electric Cranes, 79.

COOK, W. H., remarks on Steam Pipes, 155.—Gas Lighting, 37.

COOKE, R. T., remarks on Construction of Modern Workshops, 228 and 229.

CONGREVE, H., remarks on Silo Granaries, 103.

CONSTANTINE, E. G., Inaugural Address, Apprentices, 1.—Remarks on Gas Lighting, 38.—Portable Machine Tools, 54.—Electric Cranes, 81.—Silo Granaries, 107 and 109.—Milling Cutters, 132 and 142.—Steam Pipes, 151 and 158.—Modern Production of Boiler Draught, 180 and 194.—Construction of Modern Engineering Workshops, 220 and 231.

COTTON, A., remarks on Modern Production of Boiler Draught, 197.

CRANES, EFFICIENCIES OF ELECTRIC: Paper on, by R. Matthews, 57.

DAY, CHAS., remarks on Portable Machine Tools, 51.

FLETCHER, C., remarks on Silo Granaries, 108.

FOX, W., remarks on Silo Granaries, 107.

GAS LIGHTING, HIGH-PRESSURE: Paper on, by Jos. Nasmith, 17.

HARPER, J. J., remarks on Gas Lighting, 35.

HEATON, T. T., remarks on Modern Production of Boiler Draught, 194.

HERRIOT, J. S., remarks on Steam Pipes, 155.

HETHERINGTON, E. P., remarks on Portable Machine Tools, 50.

HOBBS, A., remarks on Steam Pipes, 156.

HUMPHRYES, J. H., Paper on Modern Engineering Workshops, 205.—Remarks on Silo Granaries, 107.

HUNTER, W. H., remarks on Silo Granaries, 110.

INDEX.

HUXLEY, —, remarks on Silo Granaries, 106.

INGHAM, J. R., Paper on The Application of Portable Machine Tools, 45.

INGHAM, W., remarks on Gas Lighting, 36.—Steam Pipes, 154.

INGRAM, M., remarks on Construction of Modern Workshops, 224.

LANDSTEIN, —, remarks on Milling Cutters, 140.

LEASK, H. N., remarks on Modern Production of Boiler Draught, 190.—Construction of Modern Workshops, 226.

LIEBERT, H., remarks on Milling Cutters, 134.

LONGRIDGE, M., remarks on Steam Pipes, 155.

LOSCHER, A. P., remarks on Portable Machine Tools, 51.

MANNOCK, T., remarks on Electric Cranes, 76.

MATTHEWS, R., Paper on Efficiencies of Electric Cranes, 57.

MELDRUM, J. W., remarks on Gas Lighting, 36.

MILLING CUTTERS, DESIGN AND MANUFACTURE OF: Paper on, by S. N. Brayshaw, 117.

MILSOM, —, remarks on Silo Granaries, 104.

MITTON, J., remarks on Steam Pipes, 156.

NASMITH, JOS., Paper on High-pressure Gas Lighting, 17.—Remarks on Steam Pipes, 159.

NEILSON, R. M., remarks on Boiler Draught, 193.

PORTABLE MACHINE TOOLS: Paper on, by J. R. Ingham, 45.

PROUT, F., remarks on Construction of Modern Workshops, 227.

INDEX.

REA, A., remarks on Electric Cranes, 77.

REED, F. W., remarks on Electric Cranes, 75.

RENOLD, HANS, remarks on Milling Cutters, 132 and 142.—Construction of Modern Workshops, 222.

ROBSON, P., remarks on Gas Lighting, 32.

ROYLE, J. J., remarks on Gas Lighting, 34.

SAXON, A., remarks on Electric Cranes, 73.—Silo Granaries, 108.—Milling Cutters, 139.—Steam Pipes, 152.—Construction of Modern Workshops, 225.

SAXON, G., remarks on Construction of Modern Workshops, 225.

SAYERS, R. J. H., remarks on Gas Lighting, 33.

SCHOFIELD, J., remarks on Steam Pipes, 157.

SEAMAN, C. J., remarks on Silo Granaries, 108.

SHAWCROSS, T., remarks on Milling Cutters, 136.

SILO GRANARIES FOR MODERN FLOUR MILLS: Paper on, by J. Whitaker, 85.

SPENCER, W., remarks on Electric Cranes, 79.

STEAM PIPES: Paper on, by C. E. Stromeyer, 145.

STROMEYER, C. E., Paper on Steam Pipes, 145.

SUTCLIFFE, W. L., Paper on Modern Production of Boiler Draught and its Influence on Fuel Consumption and Steam Production, 161.

TRITTON, W. A., remarks on Milling Cutters, 137.

TURNER, W., remarks on Milling Cutters, 138.

VOSE, J., remarks on Portable Machine Tools, 53.—Milling Cutters, 139.

WALLACE, W., remarks on Modern Production of Boiler Draught, 195.

WALTON, T., remarks on Steam Pipes, 154.—Modern Production of Boiler Draught, 183.

WATSON, J., remarks on Electric Cranes, 79.

WEST, J., remarks on Gas Lighting, 30 and 36.

WHITAKER, J., Paper on Silo Granaries for Modern Flour Mills, 85.

WHITEHEAD, T., remarks on Electric Cranes, 80.—Silo Granaries, 109.

WOOD, A. P., remarks on Electric Cranes, 80.

WORKSHOPS, MODERN ENGINEERING: Paper on, by J. H. Humphryes, 205.

YATES, WALTER, remarks on Construction of Modern Workshops, 229.

INAUGURAL ADDRESS

BY THE PRESIDENT,

Mr. E. G. CONSTANTINE,

A.M.INST.C.E., M.I.MECH.E.,

(MANCHESTER),

DELIVERED SATURDAY, 11th JANUARY, 1902.

My first duty is to offer you my thanks for electing me to the high office of your President. To be chosen the President of such an Association as ours, numbering 500 members, and comprising most of the highest engineering talent in this important district, is an honour of which any Engineer might well be proud, and I can assure you that I deeply appreciate the compliment you have paid me. It will be my endeavour to justify your confidence by bringing to bear the best of such powers as I possess in the discharge of the duties which have devolved on me.

The subject I have chosen for my address this evening is one, in my opinion, of the most vital importance, affecting as it does, not only the future of the engineering and kindred industries, but also the position which our country will occupy relatively to other countries in the production of engineering work; it is

"A PLEA FOR THE APPRENTICE."

While by no means admitting that we have lost our supremacy as engineering producers, as has been so glibly asserted by writers ignorant of, or ignoring the true facts—but who assumed that such was the case because our manufacturers, whose order books were full to repletion, and capacity taxed to the uttermost, were compelled to allow orders to go past them—there is no denying the fact that we shall have to look very closely into our

methods of working if we desire to retain a leading position in the race for trade with our kinsmen across the Atlantic, and our Continental neighbours.

Many reasons have been put forward to account for the ability of our trade rivals to successfully compete with us in the production of locomotives, electrical appliances, bridge work, etc., such as the natural advantage of cheaper ores and fuels; lower transit rates; protective tariffs, fostering export trade at the expense of the domestic consumer; better organisation, commercial and technical; more highly educated workmen; greater attention to workshop arrangement; superior tools; longer hours, etc., etc. Which single or combination of causes have contributed to the result may be a matter of opinion, but the position we have to face is that our rivals have obtained, and are securing, large contracts for engineering work, not only abroad but in our very midst, in competition with our own manufacturers.

This is a condition of things which cannot but cause thoughtful men to feel concern for the future.

We ought not to be greatly surprised at the progress which has been made by other countries in productive capacity during the last quarter of a century when we consider the subject.

During the last fifty or sixty years very many British engineers have found it more advantageous to accept responsible positions abroad than to remain in the old country. The training and knowledge imparted to the natives by these engineers have been the initial step in the evolution which has resulted.

The countries in the Western Hemisphere which have been benefited to the greatest extent by the importation of British skill and brains, and who are now our most severe competitors, are peopled by men possessing some of our own characteristics of pluck, energy, perseverance and tenacity, qualities stimulated

in their case by the necessity of providing work and outlets for rapidly increasing populations, and by the pronounced success already resulting from their enterprise.

Although our German friends are temporarily suffering from the effects of over eagerness and a too rapid trade expansion, these effects, while probably conducing to sounder methods of conducting business, will by no means seriously affect their determination to be in the front rank of producing nations at whatever cost to the domestic population, and we shall have to regard both German and American competition as a factor to be reckoned with in the future.

While our foreign rivals have been thus advancing, by paying special attention to what we have been apt to consider as unimportant details, we, relying on the position we had secured as "the workshop of the world" as being unassailable, have until comparatively recently regarded their methods with a mild feeling of contempt, and neglected improvement as unnecessary in our case, with the result that unless there is an all round wakening up we shall find that we no longer occupy a leading position.

Fortunately for us the true facts have been recognised by some of our firms, who have been and are putting themselves into a better position to deal with the altered conditions, but there is still a very large number of engineers who have failed to realise the situation.

What is the position to-day? Although the locomotive, boiler, heavy electrical and bridge building industries are comfortably off for work, the same cannot be said for general engineers or textile machinery manufacturers, and the prospects for shipbuilders and marine engineers are not cheerful, notwithstanding the world's record which they have established in the year just passed.

It is obvious that if we are to keep our workshops and shipyards fully employed in face of the keen, and ever keener, competition for the world's trade, our productions must be of such quality and price, while leaving a profit for the manufacturer, as will divert business in our direction. How is this to be effected ?

Among the numerous factors absolutely essential to successful manufacture, none is more potent that the quality of skilled labour employed, and it is to the workmen we must chiefly look to answer the question of whether Britain is to maintain her ground, or sink to a second place as a producer of engineering work.

Capital, commercial acumen, highly scientific and technical staffs, mechanical genius, the most ingenious and expensive machines, although highly important elements, are all powerless without the workman, aud it is he who principally controls our future destiny as a manufacturing nation.

No one, who has had the opportunity for comparison, can for a single moment doubt that the British workman is at least equal to any workman in the world in ability to produce work of as good quality and as rapidly, if he will but do himself justice.

That he does not, as a class, do himself justice is but too evident, and as an example of this we have but to notice the delay and trouble which shipbuilders and marine engineers have experienced in fulfilling their contracts, due to the wilful loss of time by shipyard hands and marine boiler makers, who have created a state of things well nigh intolerable in the shipbuilding industry.

Employers are themselves chiefly to blame for the shortcomings of the workmen, for had they taken a proper view of their responsibilities, and displayed a greater interest in the welfare of their men, the gulf which exists between capital and

labour would have been less wide, and that curse of any trade, the dissolute "wastrel," would have been so conspicuously in a minority that he would be hounded out of workshops by his steady and industrious fellows. There would then probably have been no attempts to evade the inexorable law of "the survival of the fittest" by insisting on a minimum wage, regardless of whether men are able or willing to do a fair day's work.

An alteration of the unsatisfactory conditions existing between employers and employees can only be effected by employers more fully recognising that greater attention must be paid to the training of workmen, and that the haphazard fashion of leaving them to grow up anyhow must be abandoned.

If the boy is father to the man, so surely is the apprentice father to the workman, and there is no doubt whatever that by judicious regard to the training of the apprentice very many of the troubles experienced with the journeyman will disappear.

The workman being such an important element of the body industrial, it should follow as a matter of common sense, that considerable care would be exercised in the selection and training of persons on whom so much depends, but I need not remind this audience how very far this is from being the case, or that except in a comparatively few honourable instances, this vital subject is treated by most firms as being of very minor importance.

Apprentices are taken into too many of our engineering establishments without any attempt to ascertain whether they possess the most rudimentary knowledge of arithmetic, or can even read or write properly, or have any predilection for engineering.

It is assumed, that because a lad's father is desirous that his son shall learn engineering, he possesses the necessary qualifications to enable him to become a good workman, and that if

he is allowed to *drift* through the shops for five or seven years, he will, as a matter of course, become all that is required. The conviction of some foremen, as implied by their everyday conduct towards their apprentices is, that as long as the lads don't lose time, but do as they are told and keep their eyes open, they will be all right, without any efforts of the foremen to train or encourage them.

Never was more crass ignorance of human, and particularly of boy nature displayed, and it is due to the good qualities inherent in the British race, that in spite of such unfavourable conditions, and indifference to their welfare, so many of the youths become really good workmen, and that a small percentage, by reason of natural intelligence, indomitable perseverance and force of character, qualify themselves for, and attain to the highest positions in the engineering world. On the other hand, can we feel surprise that so very many grow into bundles of mediocrity, indifferent alike to their own and employers' interests, willing to get through the day's work with the least possible mental and physical exertion, and by no means averse from taking a holiday on the flimsiest excuse, even when engaged on work of the most urgent character.

Think of the logical result of dumping boys of from 13 to 16 years of age into a workshop among all sorts and conditions of other boys and men, some of whom do their utmost to make them feel that they are of no account whatever, snubbing them if they display any tendency to think for themselves, or ask too many questions; a course of conduct tacitly encouraged by some foremen (whose only qualification probably for their post is that they are drivers) who are not slow to hold the lads up to ridicule if they exhibit any indication of exercising reasoning powers or initiative.

It is opposed to reason that a great proportion of lads exposed to such conditions during their most sensitive and impressionable

years, should become otherwise than stupid, indifferent, and as heavy as the atmosphere of the ill-ventilated, ill-lighted, badly floored workshops in which they have to labour—and prove receptive soil for the propagation of the seeds of distrust, discontent and insobriety, which eventuate in such disastrous results to the industry, and more especially to the workmen themselves and those dependent on them.

To enable us to hold our own in the world's progress, it is essential that we seriously grapple with this problem of skilled labour, for the measure of our future prosperity will be directly proportionate to the thought and care expended in the selection and training of the apprentice, ensuring him the opportunity of becoming at least a first rate and industrious workman, and, if nature has endowed him with the necessary qualifications to profit by the higher scientific education now available—a leader of men.

No boy should be allowed to start work before being examined as to his educational attainments (which should include at the very least, ability to read and write legibly, and a knowledge of the working of decimals), and his general fitness for the trade. With the educational facilities within the reach of even the poorest there is no excuse for ignorance, and any lad, who through indolence or lack of brains, or application, has failed to acquire a fair educational groundwork, is best outside an engineering works.

In my opinion boys should not commence work till they are about 16 years of age, but the age must to some extent be contingent on the progress they have made at school, physical fitness, and the necessities of the parents. A five year's apprenticeship under proper conditions is long enough to enable an intelligent and industrious lad to learn how to become a good workman.

Only those lads who, during the first few months, show by their conduct that they are workers, and have an aptitude for

the trade should be retained; if they lack the essential qualities it is surely kinder to themselves, and better for all concerned, that they should be allowed to devote such talents as they possess to some other business in which they may prove more useful. Very great care would be required during this probationary period to obviate mistakes and injustice, for some lads who appear to be dull and heavy during the earlier period of their apprenticeship, subsequently develop latent powers and abilities of high order. But I venture to think that foremen, who are really interested in their apprentices, and in the welfare of their employers and of engineering, will have little difficulty in discriminating between the likely youths and those who are hopelessly deficient.

The technical education of the apprentice should begin the first day on which he enters a workshop. The sooner the false conception that technical education consists only of theoretical learning imparted at technical colleges and schools is removed, the better it will be; one of the greatest, if not actually the principal reason why the results of the establishment of technical schools have fallen so far short of the expectations and desires of the well wishers of this great movement, may be found in the fact that the schools are generally regarded as something distinct from, and having no actual connection with the workshop.

It cannot be too strongly emphasised that technical education consists not merely of the learning to be obtained outside the workshop, but that it also includes the extremely important training of the hand and eye, the development of the sense of proportion, and of those qualities of self-reliance, pluck, and determination to surmount difficulties, the offspring of constant attempts, failures and successes, which it is almost impossible to acquire except from practical work, and without which the workmen and those who have to deal with practical engineering are at a terrible disadvantage.

The complaint of the managers of technical schools is that the facilities provided are not taken advantage of by anything like the number of students possessing the necessary educational grounding, for which there is accommodation.

Out of the youths employed in the engineering trades only a small proportion attend technical classes, and so will it ever be unless the schools are conducted more in conjunction with, and become auxiliary to the workshop, only possible by employers, managers and foremen realizing the necessity of co-operating with the school authorities, by declining to accept apprentices too ignorant to understand the elementary teaching given, and by making attendance at technical schools a condition of of employment.

When this is done, and the theoretical teaching has a closer relationship to daily practical work, making both workshop and class more interesting, there will be such an influx of students *anxious* to learn, that present arrangements will be entirely inadequate, and more accommodation and teachers will be required, and willingly provided with or without Government aid.

Opportunities will also then be gladly furnished by employers to enable teachers engaged in technical schools to keep in touch with the practice of the day by means of frequent visits to the works, and possibly, by spending a portion of their vacations in the shops (as I know some of them would be glad to do), with solid all round advantages on which I need not dwell.

It may be objected that any alteration in present conditions would lead to trouble with foremen, require additional supervision, result in loss of profits in consequence of moving the lads to different machines or departments, put notions into their heads which would make them too conceited and unfit them for workmen by stimulating their ambitions, and cause general disorganisation.

It must be confessed that in some works little short of a revolution, commencing in the minds of the principals, would be necessary before reasonable care to the training of apprentices could be secured.

As a rule, the tone pervading establishments is set by the heads. If the principals are indifferent to the manner in which their works are conducted, so long as profits are made, or regard workmen simply as so many component parts of machinery for earning a return on the capital employed, then the subordinate officials will also be indifferent. If, on the other hand, the principals would but see where their true interests lay, they would arrive at the conclusion that, if only as a sound financial proposition, it would be a splendid investment to devote more time, care, and consideration to the education of the rising generation, so as to produce more efficient workmen, whose manual skill would be supplemented by brains.

Once this truth is grasped and acted on, it will be only a matter of time for every department to be permeated by their ideas, and irreconcilables will be gradually replaced by those who, in addition to being thoroughly competent for their positions would, without pampering their apprentices, exercise tact in dealing with them; know when to give the encouraging word or look, which may mean the difference between making or marring a high spirited or studious and sensitive lad; foster the love of that heaven sent blessing, work, for its own sake, and, while encouraging the lads to think for themselves, and cultivate their mental powers and develop *character*, would give them an opportunity of gaining the greatest amount of experience afforded by the nature of the work carried on.

Fair and honourable treatment would then be secured to youth and journeyman both, and the policy adopted of encouraging and tangibly recognising extra ability in the former

by paying him something beyond the standard wage prevailing in the works, for his age.

Piece rates alike reasonable and fair to employer and workmen would be fixed *and adhered to*, thus removing one great cause of distrust on the part of the workman, and stimulating him to exert his best powers knowing that he would be fairly remunerated for his exertions.

Practical suggestions would be invited, duly considered, and if worthy of adoption, fairly rewarded.

In these days of continually increasing use of machine tools and specialisation of labour, it is less easy for lads to acquire an all round practical knowledge of engineering work, but they might often be moved about more than they are, and it is surely to employers' pecuniary benefit to have their works peopled by workmen who are not only willing but able to get the best out of the various machines, and efficiently perform any job to which they may be put.

The danger that education and better training of apprentices would unfit them for workmen is imaginary. Sound education never yet spoiled or made anyone lazy, it is the little learning which is dangerous.

A moderate quantity of pride and conceit are not undesirable traits, but should an apprentice have too much, I know of no place to equal an engineering works to bring him to his proper bearings, Nature has so distributed her gifts that, with equal opportunities, some will attain to higher positions while others will remain workmen, but *such* workmen who will not regard their toil as degrading, but feel that they and their employers are bound together and interdependent, so that what affects one will react on the other.

With an extension as to commencing age, and proper conditions of work, there need be no apprehension of a dearth of well-educated boys eager to work and learn; as it is,

progressive firms have vacancies bespoken, in some instances, many months ahead.

Obviously such a policy as I advocate cannot be carried out without a great deal of thought, work and trouble; employers and managers will have to face much opposition, and it will require persistent efforts and untiring patience to secure success.

Without expecting impossibilities, consider for a moment some of the results of this policy:—

The great majority of workmen thoroughly efficient, and putting forth their best mental and physical efforts; free trade in labour; abolition of vexatious restrictions in the conduct of workshops; increased production at reduced cost although on higher wages; stimulus to invention; trades unions fulfilling their legitimate function of looking after their members' best interests by co-operating with employers for one common end, the benefit of all; exclusion as far as possible of other than competent and industrious workmen; the settlement of labour questions without the disastrous consequences inseparable from that most barbarous of all methods—strikes; and the ability of this country to hold her own against all comers.

Then would flourish higher scientific education and research, and the taunt that the technical education of our engineers was less thorough than of those of the Continent and America be no more heard.

These are only some of the results which would accrue from whole hearted efforts to better train our workmen; the general effects would be incalculable, by no means the least being the elevation of the national character.

Some of our members, reading aright the signs of the times, have and are devoting their attention to the training of their apprentices with satisfactory results to themselves, and if only the members of this Association, as a body, could be induced to give this subject their serious and sympathetic consideration,

and thus evince the highest form of patriotism, their influence, like the ripple radiating from a stone cast into a still lake extends to the farthest shores, would be felt for good in every part of our country; and in a generation would be produced such a race of men that British engineering and the British workman would be the envy and the wonder of the world.

VOTE OF THANKS.

Mr. Thomas Ashbury, in proposing a vote of thanks to the President for his address, observed that this had given them food for a good deal of thought, and had called attention to the important truth that if they wished to hold their own they must look after the young people. He trusted that those who had the opportunity of acting upon the advice given would meet with such success that we should, at anyrate during the next generation, produce a race of men in this country who would both supersede and excel those who had gone before, and hold their own against our Continental and American friends, who seemed to have overrun us for a time in the race.

Mr. Joseph Nasmith, in seconding the proposition, expressed his agreement with what the President had said. It was rather singular to note that in a paper to be read before the Institution of Mechanical Engineers, Mr. Orcutt, a gentleman well known in connection with the organisation of factories, was practically taking the same line as their President had done, but going a little further, by suggesting that not only should they train their apprentices, but also take hold of machine men whom they brought into the place to tend automatic machines or semi-automatic machines, and devote to them the same attention and trouble. With regard to the general question of training

apprentices, he did not say it was possible with every lad taken into a place, but to some extent it certainly ought to be possible that apprentices should be trained, at anyrate those who showed the most aptitude, with a view of producing the results of which the President had spoken. There were plenty of difficulties surrounding the question, but not such as could not be overcome.

Mr. Henry Webb, in supporting the motion, said the President had chosen a good subject, and dealt with it ably. He was glad to know that already many firms were trying to do something in the direction indicated by the author, and there were signs that further progress would be made on the same lines.

The motion was carried with acclamation.

The President, in responding, remarked that he was afraid that in many respects they had been beginning at the wrong end to obtain reform. Taking, as an example, the trade unions, it was no concern of his to deprecate their objects, but he knew perfectly well that some of their actions had been inimical, as many people considered, to the best interests of the engineering trades. Now, if they wanted reformation in trade unions, it would not be brought about by outside pressure, but from the inside. If they only educated the young men who would become trade unionists, and represent trade unionists, these men would be the more able and ready to look after their own and their employers' best interests.

HIGH-PRESSURE GAS LIGHTING.

READ SATURDAY, 22ND FEBRUARY, 1902,

BY

Mr. JOS. NASMITH,

(MANCHESTER).

Threatened industries like threatened men live long. Twenty years or thereabouts a loud and alarming cry went forth consequent upon the introduction of electricity, that the era of gas illumination was at an end, and that the future was in the hands of the electricians. As we grow older we grow wiser, and those who threw away their gas shares for nominal considerations have lived to regret it. So far from gas being a defunct lighting medium the make of it increases year by year, and it is now the very best instrument, so far as brilliance and economy are concerned. It is becoming a necessity for heating as for lighting, and is by far the best for both purposes. It is true that there have been many changes in its application, and impelled by competition some of these have been radical, the stimulus of rivalry being useful in this as in other industries.

In the main the path of improvement may be said to be marked by two stages. The first was the making practicable the system of incandescent lighting, which was the work of von Welsbach in the early eighties. In principle it was no new idea, but the merit of Welsbach was that he was able to discover a material which was capable of a high incandescence, while at the same time refractory enough to last under such conditions for a reasonable time. It need hardly be said to those who had experience of the Welsbach mantle in its early days

that there is a marked difference in its lasting properties now and then. Nor is it likely that the improvement is at end, and we shall see beyond doubt in a few years better and cheaper mantles placed at the disposal of the public. This would have happened before now but for the monopoly obtained by the Welsbach Company.

The second stage in the development is the introduction of high pressure, or as it is sometimes called intensified gas lighting. It will no doubt be known to most present that the ordinary incandescent burner is of the Bunsen type, being fed with gas from a small jet, the velocity of the gas so delivered through a tube inducing a current of air of sufficient volume to ensure the perfect combustion of the gas. By covering the orifice of the burner with a finely meshed gauze the mixture is more perfect, and a so-called solid flame is obtained. What is wanted for incandescent lighting is a flame which will impinge on the whole inner surface of the mantle, and this can be obtained by means of a ring of holes near the periphery of the burner. The pressure of the gas varies with the locality, being generally not much over one inch water gauge. It is obvious that at this pressure the velocity of the gas jet and the consequent induced current of air will be comparatively slow. The new method consists in compressing the gas to a pressure of about 8ins. water—one-third of a lb.—and so increasing its velocity at the jet, thereby inducing a greater volume of air to be drawn into and mixed with it in the body of the burner. Of course this pressure is only high in a comparative sense, but it is the first step on a path which may lead us very far. In considering this last development no pretence is made of doing more than collating particulars already known, and it is only because the new method provides an improved method of illumination, which is at once cheap and effective, that the attention of the

members is directed towards it. It is already making great headway for internal illumination, and especially for workshops, and on that account forms a subject of interest to all engaged in industry.

The chemistry of the subject hardly forms that part of this subject which needs dilating on. It is sufficient to state that the gauze forming the cowl or mantle is made of cotton and is impregnated with solutions containing thoria and ceria in certain quantities. The determining element in the value of the mantle as an illuminating medium appears to be the proportion of cerium present. Many will remember Professor Tyndall's famous experiments at the Foreland with lighthouse lanterns lit by the electric arc, and by oil lanterns. The conclusions drawn by him remain valid to-day because they are founded upon a fact which is unchallengable. In considering the question of illumination it must be remembered that mere brilliance is not the highest property, except it is desired to deliver a flash of light to a specific point, as in the heliograph. Diffusion—or perhaps more correctly suffusion—is more important. Of this fact abundant evidence must have come under the notice of many members. Some years ago when Mr. West dealt with the subject of incandescent lighting for works before this Association, the author called attention to this fact as the most important in connection with lighting, and common experience has since demonstrated its truth. The light from an electric arc lamp is brilliant, but it is coldly penetrating and diffuses itself to a very slight extent. It is this property which causes it to cast so great a shadow. The air is not filled with light as it should be and outside the direct range of the rays there is no communication of light. How different is the light of the incandescent mantle. Within its range of illumination it seems to suffuse the air with light and make all the space within that range luminous. Widen its

range and you increase its usefulness. It produces no violent shadows like the arc light, but distributes the light with remarkable uniformity. It is the object of the system of intensified gas lighing to widen the range of the ordinary incandescent mantle and thus increase its illuminating value. In the spectrum of the electric arc light blue and violet rays predominate, whereas the incandescent light has more of the yellow and red, being much nearer sunlight. A very good opportunity exists in London to compare the two lights. On Blackfriars Bridge and at Ludgate Circus high pressure incandescent lamps are installed, and between the two the lighting of the street is done by arc lights. The contrast is very remarkable, and all observers have noted the superiority of gas over its rival, especially during foggy weather.

It has already been remarked that in accordance with the pressure of the gas it is necessary to regulate the velocity of its inflow so as to cause it to mix with itself a certain volume of air to insure the most complete combustion. The same remark applies to the composition of the gas, which varies in richness to a considerable extent. In the standard Argand burner the velocity of the effluent gas is 5·25ft. per second, a velocity which is much exceeded by the ordinary low pressure incandes-burner, and is only about a half that of the burner used with gas at a pressure of 10 to 12 inches of water. The effect of this change is remarkable. The ordinary Argand burner gives a light of about 3·2 candles per cubic foot of gas consumed, while a mantle heated by the flame of a burner fed with compressed gas will give from 30 to 32 candle power per cubic foot. It is of course necessary that the burner is properly designed to give the proper admixture of air. A specimen of such a burner is exhibited.

The amount of compression at present is from eight to twelve inches on a water gauge, but this is not necessarily a fixed

amount. There are two principal methods of obtaining this pressure. In the first the gas after passing the meter is compressed before entering the service pipes. In the second it is compressed in the lantern by means of mechanism on the principle of a hot air engine and actuated by the heat evolved by the burner. The latter system is perhaps better adapted for external lighting on account of the self-contained character of the lantern, and is worth a description on account of its ingenuity. The first method may be called a collective, and the second an independent system.

The first method can be easily applied in any workshop. The first thing to do is to determine the unit to be lighted. In most cases a complete workshop would form a convenient unit, each detached building—if large enough—being treated as a complete shop. In each of these there is usually a complete internal outfit of pipes, which, if properly fitted so as to be tight, can be used as the internal service for the purpose of distribution. To them the lamps necessary can be affixed, and all that is required is to provide the necessary compressor. There are two compressors in use, one of which is much simpler than the other. It is shown in action operating the group of lights erected and is known as the "Keith," being supplied by the James Keith and Blackman Co., Ltd. It consists of an outer case mounted on a cast-iron base-plate and forming a tank for water used as a seal in the way common in gas apparatus. An inverted copper bell forms the storage for the compressed gas, which finds its exit by a pipe projecting upwards within the bell from the base. The latter is suitably weighted, as shown, so as to fix the pressure. Within the storage bell a second or compressor bell works, this being fixed to a rod attached to the piston of the reciprocating water motor fixed at the lower portion of the compressor. To this water motor a connection is made to a supply pipe extending above the com-

pressor body and having at its upper end a stop valve. The gas enters at the bottom and is conveyed nearly to the top of the compressor bell by a pipe closed by a circular valve. In the top of the bell is a similar valve, opening out into the storage bell. The operation of the device is as follows :—

The water being turned on the piston lifts the compressor bell, and in doing so sucks gas in through the valve. The downward stroke being now made the inlet valve is closed, and the gas is discharged by the valve at the top of the compressor into the storage bell. This is lifted against the pressure created by its weight until the pressure becomes too great, when the bell lifts and operates the lever fixed on the plug of the valve on the inlet water pipe and closes it, causing the motor to work more slowly or eventually to stop. The fall of the bell is of course followed by the acceleration of the motor. The compressed gas is delivered by the pipe within the storage bell to the service pipes, and the vertical position of the bell naturally depends upon the rate of out-flow of the gas. Thus the apparatus is purely automatic, and not only compresses the gas but by means of the connection between the storage bell and water admission acts as a governor so as to establish a uniform pressure in the gas delivered, which is a matter of some importance.

The Scott-Snell lantern has fitted within it the requisite number of burners and mantles, and has formed at the top of the lantern an annular space, within which works loosely a piston or displacer. The inlet of the gas is at one side of the annular space, being admitted by a drop valve and discharged at the other side by a similar valve. The arrangement resembles a hot air engine, and in action is similar. The annular receiver is made of metal, and forms the top of the lantern above the burner and mantle. Above the gas chamber water is placed to keep the upper part of the chamber cool, and a tube is carried

from the gas chamber through the water space, in which an upwardly projecting spindle from the piston or displacer works. The spindle is attached at its upper end to a spring diaphragm weighted by a spring which establishes the necessary pressure. The inlet pipe conveys the gas from the main to the gas chamber, and the outlet pipe from the latter to the burner. This is only a brief description of the device, but it will suffice for present purposes.

The action is as follows: When the burner is first lit the displacer is in its central position, and gas passes freely through the chamber in which there is an equilibrium. As the gas becomes heated its expansion begins, and at first the hot gas flows along below the displacer and mixes with a similar but cold current above the latter. As more heat is absorbed by the gas it is still further expanded, until it closes the inlet valve and raises the displacer against the resistance of the diaphragm and spring. Gas then flows out and the reduction of the pressure causes the displacer to fall, upon which the inlet valve is again opened, cold gas flows in above the displacer and contraction takes place. Upon this the outlet valve is closed by the pressure beyond it, and the process begins *de novo*.

There are two points deserving of notice. When the displacer commences to fall a flash of the hot gas passes above it and is chilled, thus creating a partial vacuum and accelerating the descent of the piston. The second point is that the diaphragm for a certain portion of its deflection during the ascent of the displacer, preserves a spheroidal shape, but at or near the end of the ascent becomes conoidal. The effect is to help the final portion of the ascent and conversely in descending to quicken the speed of the displacer early in its downward stroke. There are one or two other details about this lamp which do not however need to be dealt with. Owing to certain difficulties which were found in working the lamp just described, consisting

of the obstruction in the pipe conveying the gas to the burner from the presence of napthaline, the makers have recently adopted the method of heating the air instead of the gas. The action of the displacer is still the same, but it is made as a hollow plunger working loosely in a cylinder. The heated and compressed air is supplied by a burner having a central gas jet with holes at a little lower level than the jet, but adjoining it. When started the burner acts as an ordinary low pressure one, but in a short time the air current begins to flow, and the result is an intensely brilliant light.

Having thus described the chief instruments used, it will now be convenient to give some instances of the use of this new system of lighting. Many members no doubt saw the magnificent specimen of out-door lighting at the Glasgow Exhibition of last year in the main avenue. The lamps there were in two rows, one on each side, each series forming a circuit provided with a separate Keith compressor. The lanterns, burners and mantles were supplied by the Welsbach Company. In all 237,000 candle power was provided by this series of lamps. The gas cost 2s. 6d. per 1,000 cubic feet, and the cost of the gas consumed was 17/- per hour or a little less, or about ·86d. per 1,000 candle power. It is safe to say that no system of electric lighting could be devised which would give so great a flood of light at anything like the cost. The pressure in this case was maintained at 8ins., and as many of the lanterns were designed to give 1,000 candles, with a consumption of 31½ cubic feet per hour, they could be compared with the so-called 1,000 candle power arc lamps placed near, much to the disadvantage of the latter.

Many of you have no doubt noticed the brilliant display of intensified lighting on Piccadilly where it competes with the electric arc lamp, and which we owe to the prescience and vigour of Mr. Alderman Gibson. The lamps here are in

one circuit, the combination again being that of Welsbach mantles, burners and lanterns, with a Keith compressor. As this was an experimental plant, careful particulars were kept of the cost, consumption and maintenance, and the following summarised figures will show the result. These were given by Mr. J. G. Newbigging, the gas engineer to the Corporation, and relate to 86 day's work. The cost of laying the special service pipes for gas, the necessary water connections, cost of compressor and burners, and all other costs was £155. 0s. 2d. For maintenance, the installation cost, including 10 per cent. interest on capital, £18. 9s. 2d., made up as follows:—

Gas, 83,000 cubic feet at 2s. 6d. per 1,000, £10. 7s. 6d.; Water, 25,560 gallons at 4·85d. per 1,000, 10s. 4d.; mantles (70), rods (1), £4. 7s. 7d.; extra attendance and glazing £1. 17s. 11d.; and interest for one month at 10 per cent. £1. 5s. 10d. The number of hours burning was 847, and the number of burners 85, and the consumption of two mantles per burner in the time. This has been considerably improved on. The relative cost of the various systems of gas lighting is, for flat flame lighting per 1,000 candle per hour, 7·5d.; from the ordinary low pressure lighting by Welsbach incandescent 1·96d.; and for the Piccadilly installation 1·77d. Compared, therefore, with the other systems of gas lighting there is a decided gain, and with the electric light the cost is reduced by at least half on the most favourable basis.

It will be noticed that in this cost is included that of a separate service for the series of lamps. The ordinary service pipes in Manchester are, of course, only carrying the ordinary low pressures which alone can be used with the present fittings. In the case of a workshop the internal service pipes are already in position, or if a new building would have to be put in in any case, so that this factor need not be taken into account. Further several of the most advanced gas companies are

beginning to encourage the use of the incandescent fittings by their customers and are inaugurating a system of regular inspection, under which they superintend and put into good condition the fittings.

In such a case as this it would be easy enough to lay the mains so as to carry so low a pressure as 8ins, but as for a long time the intensified light will only be wanted for special districts or areas, the use of special service mains for outdoor lighting will probably be the best course. These, of course, are not needed if independent lamps of the Scott-Snell type be used. For internal lighting, however, the only addition is the compressor and the lamps, and this system will probably prove to be most adaptable for this purpose. In the event of gas being supplied in the ordinary way at higher pressures than now, one important result would follow, viz., a great improvement in the character of the gas fittings usually supplied. These are ordinarily as rubbishy articles as can be obtained, and would require much overhauling, with advantage all round.

Mr. A. W. Onslow, of Woolwich, in a paper published in the *Gas World* of the 16th November last, advocates much higher pressures than 8ins., and expresses an opinion that a 2,000 candle power burner may yet be got. He gives the following figures and statement which, as they represent a bold experiment, are given in full,

"Take the following as an illustration in my experience. We have a factory lighted by gas at 54ins. pressure, which had been previously lighted by the ordinary flat-flame burner. About 500 to 600 men work in the building, which is well filled with machinery of all descriptions; and, therefore, the very difficult problem arose as to pleasing all parties, every man requiring a light to suit his own particular work (quite a different matter from lighting an open space). The flat flames numbered 625; consumption of gas, 4,375 cubic feet per hour;

illuminating power, 7,437 candles; cost of gas 8s. 9d. per hour—maintenance not calculated or included.

We have now dispensed with all these burners, with the exception of about 20, and substituted high-pressure gas lighting, to the great satisfaction of all concerned. Fortunately, I had the sympathy of my superintendent, Colonel M. T. Sale, C.M.G. and of Colonel Watkin, C.B., the superintendent of the factory concerned, both of whom were prepared to back up any enterprise that enabled me to carry out the work just described. The result is as follows:—Number of incandescent burners, 150; consumption of gas per hour, 2,250 cubic feet; illuminating power, 64,950 candles, or 433 candles per lamp; cost for gas, renewals of mantles, power and every incidental charge 6s. 10½d. per hour; and the workmen are pleased with the light, as there are no shadows, but an equable light throughout. The 6s. 10½d. is made up as follows:—

	d.
Gas	0·33
Mantles . . .	0·10
Renewal of burners .	0·01
Pilot light . . .	0·01
Labour . . .	0·05
Contingencies . .	0·05
	0·55 per hour for 433 candles.

This is a reduction of 20 per cent. on the entire charge during the past twelve months and no credit is due to burner and mantle makers. We have to use burners of no more illuminating power than we had eighteen months ago, and whether they will be more enterprising remains to be proved.

Now, will any electric light installation compare with this one at £450 (net cash) light for light? Can you obtain a thorough distributed electric light installation to displace flat-flame gas burners and give a quarter of a million candle power

at a cost of £1,700, and an annual saving of from £200 to £400 per annum, with nine times more light?

Under the old system we obtained 71 candle power for a penny, and under the new 787 candles. It must be clearly understood that this was done only after very careful consideration; but the result justifies the trouble. Care must be taken to ensure the thorough up-keep of the light after it is done; but who would expect an electric arc lamp to look after itself, or question the number of carbons it uses, when the total cost has to be considered? Burners, mantles and lamps do deteriorate unless well looked after.

It is a pity to allow the light to diminish below 30 candles per cubic foot at any time, and for this reason the point is being pressed more than may appear necessary; and for the sake of increasing the cost, say 3d. per hour, or even beyond this sum during lighting hours, for a large number of lights, it is better to have a thoroughly capable man to attend to the work. Gas lighting has at times a bad name, and it should not have. Unless we recognise the responsibility for up-keep of high pressure lighting, better by far leave the light alone altogether."

The figures just given, which will in a short time be supplemented by many others which cannot now be obtained because of the short time during which the system has been in vogue, show that the new method of lighting has favourable points which cannot be overlooked. After this paper was in print the author received particulars of a case in which an installation of these lamps has been put up in close proximity to a series of arc lights, both sets being used to illuminate parts of the same building. The cost of attendance, mantles, gas and water per 1,000 candles is 1·448d. per hour, or less than half that of the arcs. For outdoor lighting it is making great strides, but it is probable that the conditions will be more favourable internally, because the non-exposure of the mantles to gusts of

wind will lengthen their life. The Tower, London, Blackfriars and Southwark Bridges, have all been lighted by this system, there being 22,200 candle power on the Tower, and 11,700 candle power on Blackfriars. In the latter case there is, as stated, a comparison to be made with the electric arc light, again to its disfavour. There are some special appliances applied to the lamps to avoid certain pitfalls in outdoor lighting, more especially the deposition of napthalene. Owing to its diffusiveness, the superiority of the light over the electric arc light has been demonstrated in the recent fogs, as has been testified to by various observers. It is not alone in usefulness and illuminating power that the light excels, it is much more economical as can now very easily be proved. Many installations have been carried out in this district, and many others are in hand.

One factor of some importance must be touched upon before closing. A great deal has recently been heard of Mond gas, which is a well known material modified. The use of water gas enriched or otherwise is now very prevalent, and with the extension of gas heating and the incandescent mantle the time has come when a reconsideration of the question of the compulsory luminous power of gas may be made.

Mr. George Livesey, one of the most far-seeing gentlemen of those controlling the gas industry, has already pointed the way by inducing Parliament to consent to a reduction of the standard from 16 to 14 candles, and it is not too much to expect that with the new developments this standard may be still more reduced. A rich gas is necessarily a dear gas, but if the standard of richness is reduced the cost will be correspondingly reduced. In other words the consumer will be able to get his heat and light on lower terms, and in this way save his purse and purify the atmosphere. Everything which tends to render a lower standard of illuminating gas possible must result in

benefit to the public generally. Compression or high pressure is a step in this direction, and with modern aids will enable a cheaper gas to be effectually employed. Not only so, but this can be done without diminishing the utility of the gas as a heating medium, as is well proved in the case of an installation in Openshaw, where at a wholesale clothier's establishment, not only is the system used for lighting but for heating gas pressing irons, with the result that they are better and more uniformly heated. Evidence is growing that the new light is the best and most economical now to be had, and week by week further evidence to this effect will be received. For workshops at least it has special application, and it is with this in view that this paper has been written. At the present nobody in the gas industry is standing still, there is a commendable activity in the profession, and seeing that every reduction in the cost of gas strengthens the prospects of the industry in competition with electricity, the gas engineer may well say "Sweet are the uses of adversity which, like the toad, ugly and venomous, wears yet a precious jewel on its head."

DISCUSSION.

Mr. John West said that as one of those "old fogeys" connected with the gas industry he was pleased to hear Mr. Nasmith speak in the way he had done. He (Mr. West) was one of the first to indicate his belief that electricity had a great future as a motive power. It had come true, but at the same time he had said he felt it impossible that it could compete economically with gas, and he had given statements and facts from experiments worked out, which had never been refuted. That was about ten years ago. Now, they had from Mr. Nasmith an account of something in the way of gas-lighting

better than they had ever had before, and so far as he knew the statements made in the paper were statements of fact which the electricians might try to "rub off the slate." They were greatly indebted to the Manchester Corporation for taking in hand the experiments they had made in connection with the new system, and displaying its advantages.

Some years ago he read a paper before the Association on the lighting of works by incandescent gas lamps. At that time he had made experiments in the works with which he was connected, where he put clusters of six incandescent burners under six reflectors, about 6ft. diameter. Those were a great success at the time, and he had received no end of enquiries about the system, which had led to similar arrangements being adopted in other engineering works. Now the intensified light had come forward, and of course they must have everything new as it came out, so long as it was good, and this was now being tried.

With regard to the Corporation installation, he thought the figures given would not be so high, in future, as some of the items of expense would be considerably reduced. As to the question of candle power, he thought he was the first gas engineer to place on record that they could get as much light from an incandescent burner with 14 candle power gas as with 25 candle power gas. Then why should they make the richer gas. He said "Don't make it," and if everybody would use incandescent mantles the Corporation could at once reduce the quality of the gas they supplied, and lower the price accordingly. Mr. Nasmith had mentioned what Mr. Livesey had done and that was the direction in which they required to go.

Personally he had not said much against the electric light, except that it was very expensive, and they could easily see how it must of necessity be more costly than gas when they considered the mechanism, with the accompanying losses, involved in producing the electic light, as compared with the simpler and altogether

more economical manner in which gas was manufactured. As an engineer, no one had a greater respect than he had, for his electrical engineering brethren. They had worked up their mechanism to a perfection that was really marvellous, but the fact remained that gas could be produced more economically, and he consequently thought there was a future yet for the gas industry. They should always get to know what was a really good thing for them, and when they had done so, not throw it over for anything new and fashionable that might come in their way, until they had thoroughly proved it.

Mr. Percy Robson observed that there was no question as to the relative cost of gas and electricity, but as to their application he thought in some cases it would be found that the electric light and in others that gas was the most suitable, and they ought therefore to feel grateful for having both methods at their disposal. Taking such a building as the one in which they were sitting, there were other questions to consider than the first cost of the light. The question of ventilation had to be taken into account. It was important that the air should be kept pure and fresh, and in securing this they were helped immeasurably by having the electric light instead of gas. Then there was the question of cleanliness, in which also the electric light had the advantage. Then again, for obtaining a pretty effect, he thought it would be granted that electricity was superior. On the other hand he thought there was a great future for gas lighting in connection with street illumination. That was probably the direction where there was the greatest field for this incandescent lighting—comparatively speaking.

There was one other point he would like to mention, whatever might be the relative value of electricity as an illuminating agent, there was no question of its high efficiency as a means of conveying power in large works, and it would often happen that

with the plant that they had to put down in any case for electric driving, the increased cost of providing electric lighting would not be so serious as under other circumstances. This and other points should be taken into consideration, and he thought they would find that gas and electricity had each its merits, according to the conditions of any particular case.

Mr. R. J. H. Sayers said he noticed that the mantles in the new system were suspended from the outside, whereas the ordinary mantles were suspended on a crutch in the centre. When on the Continent a few months ago he had noticed that it was more common to suspend the ordinary mantle from the outside than on a crutch in the centre. Was there any advantage in one system over the other? He believed there were other systems of intensified lighting than that which was produced by a motor; he had read about a system used in Berlin in which there was no motor. He would like to know what were the merits or demerits of such a system as compared with one requiring a motor. He also wished to know if there was any difficulty arising from the freezing of the water in wintry weather. That point had no doubt been considered by the inventors, but no mention of it appeared in the paper. With incandescent lamps there was certainly need of more attention than in the case of an ordinary burner.

During the visit of the Institution of Gas Engineers to Berlin some few years ago, it was noticed that the incandescent lamps there were all in good condition, no bad mantles, no half lights. At first they thought the mantles had been put up specially for the visit of the English gas engineers, but on enquiry they found this was not the case. The lamps were always kept in good condition, and not only was a lamplighter employed, but there was also a man to go round and see if the mantle was in

order. Any bad mantles that were found were renewed, so that the efficiency of the lighting was kept up.

Mr. John J. Royle said he had a little practical acquaintance with the high pressure gas system in its application to workshops. He had recently had a good share in the responsibility and pleasure of erecting a new works in the neighbourhood of Manchester, at Irlam, and they had installed there a gas lighting plant on the high pressure system. The plant was not very large, the total candle power being 19,000. The cost to fit up the installation was £231. 19s. 3d. The plant was put up by the Keith and Blackmann Co., and it had been put up well. The light was distributed as follows: in the machine shop, which was 250ft. by 90ft., there were ten lamps of 1,000 candle power each; in the iron foundry, which was 120ft. by 90ft., they had six lamps of 1,000 candle power each; in the brass foundry, which was 90ft by 90ft., there were two lamps of 500 candle power each. There was also a lamp of 1,000 candle power in the stores, and a lamp of equal power for another department. On Jan. 21st, 22nd and 23rd they made careful tests of the cost of burning. For 10 hours 20 minutes illumination, burning full power, the gas consumed was 8,040 cubic feet. The cost of gas from the Salford Corporation being 2s. 9d. per 1,000 cubic feet. The cost worked out at £1. 2s. 1d., and to this must be added the cost of renewing mantles during the period of test, which was 3s. 4d., making a total of £1. 5s. 5d., equivalent to 1·83d. per 1,000 candle power per hour. The cost per hour for the 19,000 candle power was about 2s. 2½d. for gas and 4d. for mantles, or 2s. 6½d. altogether.

He might say that in this he had included interest on capital, allowed for maintenance, 10% depreciation, and also one hour per day for a competent man to look after the plant. His

experience was it was necessary these things should be looked after by some competent man. He might say that in the foundry at first they had some trouble owing to the rapid destruction of mantles, on account of the lamps being of the open type, which also allowed too much draught. They, however, had had the lanterns closed in more at the top, with the result that the loss of mantles had dropped to quite a normal figure. There was still, however, room for improvement as regards mantles. They had a habit of dropping at the neck, and "sitting down" at an awkward time.

As to the results: the floor was well lit, and men could work there in comfort. Where, however, the machine tools were running, and the men wanted a local light over their work, they supplemented the general shop light by the incandescent electric light. As a general shop light the high pressure gas system was very satisfactory, and on the whole he was well pleased with it. He thought it had a distinct future before it for shop-lighting in engineering works. In the figures he had given he had taken no account of water loss, because although this occurred he did not think there ought to be any loss. They were about to make a little re-arrangement whereby the water would be conveyed into the boiler house and used for boiler feed. In most cases, by a little scheming, they could save it. As to freezing, the only way was to put the compressor where it would not freeze.

Mr. J. J. Harper thought that when they got gas engines of large units, as they shortly would have in South Staffordshire district, it would be possible to generate electricity at a far cheaper rate than at present, and it would be a great competitor of gas lighting when it came about. From what he could gather, where large units were used, the gas engine could be used to generate electricity at a very low rate. It was contemplated

putting down very large plant in South Staffordshire, and no doubt when the cheap fuel was used for producing the gas and large unit gas engines were used for generating electricity, they would see electricity competing with gas for lighting puposes on much more favourable terms than at present.

Mr. J. W. Meldrum asked what reduction in the price of gas per 1,000 cubic feet would be possible, reckoning 2s. 6d. as the current price, if the quality were reduced from 16 to 14 candle power. Further, he would like to know what was the limit to which they could reduce the candle power, without lowering the value of gas for use on the high pressure incandescent system, and what would the price drop to at that limit.

Mr. W. Ingham asked whether Mr. Nasmith had any information as to how the cost would compare with that of acetylene gas, which had been adopted in a number of cases in districts which were a long way from a gas-works. He understood a number of towns in Ireland, had adopted acetylene gas in preference to the ordinary system. Another question he would like to ask about the high pressure gas was as to its reliability in foggy weather. With the ordinary gas it was, as they all knew, a common thing in foggy weather to reduce the pressure. He would like to know what would be the effect of reducing the pressure in the case of the intensified system. Again, there was the question of purity of air to be considered in connection with any system of lighting they might adopt. It appeared to him that the new system was in its infancy, and he was looking forward to even greater progress during the next year or two.

Mr. John West said he had dealt with the question of the advantages of gas engines some years ago, and had recommended that the cheaper way to produce the electric light would be

to use a gas engine. He was a very great advocate of the gas engine. As to Mond gas, it was really generator gas, and he might say that he had made some experiments with the gas engine about fifteen years ago, and tested Dowson gas against Manchester gas. The Dowson gas cost about 7d. per 1,000 cubic feet, against 2s. 6d. for the Manchester gas, but it took five volumes of the former to produce the same effect as the latter, so that with extra expense for the plant and attention, it cost considerably more to work with the Dowson gas than with the Manchester gas at 2s. 6d. It was proposed to sell the Mond gas at 2d. per 1,000 feet, and he might add that he was producing large volumes of generator gas at 1d. per 1,000 cubic feet *in situ*. With regard to the reduction in the cost of gas in proportion to the candle power, it depended somewhat upon the first cost of the material and the apparatus used. They generally calculated it, if they wanted to increase the candle power, at from 1¾ to 2d., but if they reduced it he thought they would reduce the cost at a somewhat different rate, and as they got down they might bring it to 1d.

Mr. W. Cooke asked whether gas could be intensified without using mantles. The fragility of the mantles was one of the difficulties in connection with incandescent lighting.

Mr. H. N. Bickerton thought there was very little difference in heat value between Mond and Dowson gas. Dowson gas could be easily produced, including fuel, labour, and interest, equal to Manchester gas at 10d. per 1,000. That was, Dowson gas could be produced at a little over 2d. per 1,000 cubic feet, but almost four times the volume was required to produce the same heat value in the gas engine. As a gas engine manufacturer he would have been glad if the gas engine had been brought before them more prominently. Referring to the lanterns at the Glasgow Exhibition, Mr. Nasmith said they gave

1,000 candle power, and they consumed 31½ cubic feet per hour. The ordinary arc lamp, 10 amperes, was supposed to give considerably more than 1,000 candle power. Taking it that the arc lamp gave 1,000 candle power, the light given by the Glasgow lanterns could be produced in arc lamps with a considerably less consumption of gas in the gas engine than that burnt in the high pressure lamps. An arc lamp did not take quite one HP on the brake, but supposing it did, with a good gas engine they could get two arc lamps for the same consumption of gas as was required for one of these lanterns.

Taking Mr. Royle's case, where there was 19,000 candle power, it would have taken on an ample estimate, 20 HP with a gas engine to give the same light through nineteen 1,000 candle power arc lamps, which meant not more than 350 feet of gas per hour or 3,500 feet for 10 hours, as against 8,040 feet with the incandescent high pressure lamps. The great trouble in connection with the incandescent gas system was the mantle, and unless this was considerably improved he did not think this method of lighting had come to stay, so far as workshop lighting was concerned. Then again, for a great many jobs they required a handy light, which they could use anywhere, and this they could not get with the incandescent mantles. Compared with the arc lamp light, he did not think the incandescent light carried as far, Putting the incandescent gas light against the incandescent electric light, the latter would require a considerably greater consumption of gas for power than the arc lamp required, but he thought they would be able to get the same light from incandescent electric lamps as from incandescent gas burners, with no more comsumption of gas in the gas engine than in the burners of the incandescent gas lights.

The President (Mr. E. G. Constantine) thought it was very important to have the best light possible in a workshop, both as

regards its effect on the quantity and quality of the work turned out, and whether local conditions rendered that light, the electric, gas, or oil light most suitable to the circumstances, was a matter which had to be carefully considered in every particular case. He had pleasure in moving a vote of thanks to Mr. Nasmith for his valuable paper, which could not fail to help them in the consideration of the question of workshop lighting.

The President's proposal was unanimously adopted.

Mr. Nasmith in replying on the discussion, said he was surprised to hear Mr. Robson's remarks as to the ventilation of the building in which they were holding the meeting. The building was ventilated on the Plenum system, air being let in at the top and out at the bottom. So far as purity of air was concerned, it would not matter whether the building was lighted by incandescent gas lights or the electric light, as air could be driven in fast enough to take off all impurities, whatever system of lighting they adopted. That was the very principle of the Plenum system, and they could have the air as pure with gas lights burning as with the electric lamps. Mr. Bickerton thought the electric arc light was more penetrating than the incandescent gas light. That was just the point. It was penetrating, but not as illuminating as the incandescent gas light, the reason for which was obvious when they considered the character of the rays in the two lights, the latter containing a greater proportion of what were the most light-giving rays in the spectrum. Mr. Bickerton assumed that the consumption of gas in a gas engine settled the question. But assuming his figures to be correct it must be remembered that it was the price per candle, or per 1,000 candles, at the lamp which was the determining factor. The cost must include all maintenance and working charges, as

well as interest on outlay. In the Manchester cost of 1·64d. per 1,000 candles per hour, these items are included. Can Mr. Bickerton quote an instance of an assumed 1,000 candle power arc lamp costing anything like so little? That and not the consumption of gas in an engine is the problem. With regard to acetylene gas, there was not the slightest doubt the high pressure light from coal gas was very much cheaper than acetylene. With respect to low quality gas, it was entirely a question of the proportion of air that would have to be mixed with the gas to get an equal illuminating power as they lowered the quality. In answer to Mr. Ingham the compressor always maintained a constant pressure of gas, so that variations in the normal pressures in the pipes did not matter.

With respect to mantles in this country we were far behind the state of perfection that was obtained in other countries. The reason was very obvious. The Welsbach people had by means of the patent laws of this country a gigantic monopoly. They were issuing three or four hundred writs per week, against unfortunate people who happened to serve customers with competing mantles, and many of whom could not afford to defend the case, with the result that the injunction went by default. There was, however, a very good prospect, happily for the whole industry of the Welsbach people being forced within the next week or two, into a fight which he thought would settle the question once and for all, whether the Company were entitled to exercise this gigantic monopoly or not, and if the Company happened to be beaten, they would soon see pouring into this country mantles of highly superior quality, of which there were plenty on the Continent, and the stress of competition would force the Welsbach people themselves to manufacture special mantles for this new system, as they were pushing high pressure lighting with a great deal of zeal and

vigour, and to endeavour to meet the new conditions, which would lead to a very great increase in the quality and quantity of mantles used. In conclusion he might say he had thought the subject he had dealt with was ripe for description, and although it was not in a position in which they could absolutely prove the case up to the hilt, it was rapidly getting into that position, and within the next twelve months, figures would no doubt be available, which would show that with an ordinary gas of average quality, the cost, including maintainence, and interest was brought down as nearly as possible to 1½d. per 1,000 candle power. Since this discussion had been put into type the figures of the installation on Piccadilly had been obtained for a period of 365 days, and were better than those given in the paper, viz., 1·64d. per 1,000 candles per hour. The long litigation with the Welsbach Company had also come to an end, on terms which are equitable and anti-monopolistic. The price of mantles is to be considerably reduced, and under the terms of the agreement new forms can be easily introduced.

On the motion of the President, a vote of thanks was accorded to Mr. J. H. Reynolds, and the authorities of the School of Technology, for allowing the Association to hold the meeting in that building.

THE APPLICATION OF PORTABLE MACHINE TOOLS.

READ SATURDAY, 8TH FEBRUARY, 1902,

BY

Mr. J. R. INGHAM,

MANCHESTER.

Having been asked to prepare a few words on this subject at a few days notice, I consented, fully believing that it would be the means of starting a discussion which would be of far greater interest to the members than anything which I might say on the matter, my experience being more of a manufacturer of the machine tools rather than a user of such.

The gradual development of electrical enterprise of recent years having led to the manufacture of generators of large dimensions, it became necessary to design some special kind of machine tools to do the required machining quickly, accurately and with as little handling of the work as possible.

The machines I am about to bring to your notice will give a fair idea of the types of machines which are being found most suitable for this heavy class of work.

They are all portable and electrically driven, the motors being fixed to the frame of each machine.

The plates exhibited are part of a number of machines which have been built by the firm I am connected with for the General Electric Company of Manchester and Witton (Birmingham), it being the intention of this firm to use portable electrically driven machine tools to their fullest advantage in the manufacture of large Generators in their new works at Birmingham.

In dealing with this subject, I only intend to take into consideration portable machines which are electrically driven

and which are intended for dealing with pieces of fairly large dimensions, such as are required for the manufacture of large Generators, Stationary and Marine Engines, and similar work.

To reap the full benefit to be derived from this system of manufacturing, we must first of all be equipped with an electric installation, and secondly, a large planed T slotted floor plate. These floor plates could be conveniently made up of pieces say 10ft. by 5ft. by 10in. deep, tongued and grooved on the sides and bolted together in blocks say 20ft. square, and continued to any length down the centre of the shop, as necessity occurred. The weight of these floor plates would run about one cwt. and a quarter per square foot.

I am informed that the Allis Engine Company of America, contemplate laying down a baseplate 250ft. long in their new works, with the object of using portable electrically driven machine tools in connection with the manufacture of their Engines etc. Several large electrical firms are using this system of manufacturing with evident success.

The wall plugs for making the necessary electric connection are generally placed on the stauncheons which support the roof and cranes, and fixed about six or seven feet above the ground, a switch being fixed on say every fifth or sixth stauncheon, for cutting off the current whilst making a connection.

It would perhaps be as well at this point to give a short description of each of these machines, and then give one or two examples showing how they can be economically applied to various work.

The Side Planing machine, Plate No. I. is capable of machining a vertical surface 8ft. high by any reasonable length, and by placing the tool vertically, and feeding the ram outwards, will machine a horizontal surface 2ft. wide. The ram carrying the toolbox is capable of being set at any angle.

The Slotting machine, Plate No. II. is capable of machining a vertical surface five feet high by three feet wide, and the Drilling Machine Plate No. III. has a radius of five feet and is capable of drilling a hole two inches diameter out of the solid.

Each of these machines are provided with eye bolts, so as to be easily transported, and are provided with planed flanges at the base for setting and cramping purposes; of course these three Plates do not by any means represent the whole family of portable electrically driven machine tools, these being made not only for planing, drilling and slotting, but also for shaping, milling and boring. Unfortunately, I have no Plates of the three latter machines.

We will now consider one or two examples as to how these machines can best be applied to the work they have been designed for, and whether it is an economical method or not. I admit that the first example I am about to give is one of the best that can be put forward in favour of the portable electrically driven machine tool, it being well understood that it is the manufacture of these large electric generators that has led to the development of these machines, the facings being numerous, some distance apart, and of small dimensions compared with the castings themselves.

The first example is the machining of an alternator yoke or shell; Plate No. IV. shows the position of each machine when at work. You will notice by the aid of this diagram, that it is quite an easy matter to machine five facings simultaneously, and be drilling the holes for bolting the laminated plates to the shell at the same time. I think you will all agree with me that it would be a difficult matter to find any other system which could accomplish this work in a quicker and more economical manner.

The second example, Plate No. V. shows the application of the electrically driven Side Planing machines when machining

the standards of large vertical engines. The standards would be bolted down on their sides, in lots of two, four or six, in the manner shewn on the diagram, and machined on the top and bottom facings at the same time. After this has been accomplished, the machines should be removed to operate on other work, while the portable, drilling and boring machines are engaged in boring and drilling the necessary holes for bolting the standard to the baseplate etc. After these have been completed, the two side planing machines could again be got to work on the facings for the cross head guide bars, the machines being placed at right angles to the base of the uprights. When these are finished the outside pair of standards would be removed and the machines closed up towards the next pair, and so on, until all are completed.

You will notice in this example, that all the operations I have mentioned are carried out with one setting and without disturbing a single bolt until the machining is completed, and with at least two tools at work in every case.

The first portable milling machine we made was constructed for use on the table of a 20ft. × 6ft. × 6ft. plano milling machine. The portable machine was placed transversely on the front of the table to operate on some facings cast on the side of a high speed engine body. At the same time two face cutters were engaged machining the top, the table of course feeding forward at the same time.

When passing through one of our large engineering works in the district I noticed a very large powerful planing machine engaged machining a bearing about 18in. long ready for the cap. This bearing was cast at one end of a section of a large vertical engine baseplate. This was being done by means of the tool box travelling on the cross-slide, the table being fixed; I considered this was a very expensive machine to be occupied in this manner. If the portable

electrically driven machine tools had been at hand this job could have been taken off this machine after having the underside and joint machined, and the remainder of the machining such as the facings for the standards, the slotting of the bearing for the cap and the drilling and boring of holes could all be done at one setting by means of portable machines.

The baseplate would, of course, have to be reared on its edge and bolted to an angle plate which would be fixed to the floor plate.

How often have we noticed large marine cylinders and similar objects being machined by means of large wall planers with only a single tool at work when numerous smaller facings that required machining were staring you in the face, almost inviting you to apply some quicker method whereby the facings could be made presentable and the cylinder relieved of its weary position.

These are a few cases where the application of portable electrically driven machine tools would have the desired effect.

I could give a great many more examples where these machines could be economically employed, but time will not allow me to do so. Let it suffice to say that these machines, although designated portable machines, are equally useful when placed on a baseplate and used as ordinary fixed machines, their portability in no way interfering with their use in this manner; this being the case, coupled with the fact that one piece can be fixed while another is being machined, places them in such a position that they are rarely if ever idle.

I have no intention of conveying the idea that these machines are going to entirely dispense with the use of large fixed machines, as I am quite aware that there will always exist certain pieces which would be rather difficult to machine otherwise; but what I do say is this, that a great deal of work which is done on these large expensive machines could be done more

economically and with greater dispatch by means of one or more of the less expensive portable machines, and that these latter machines are destined in the near future to play an important part in the economical manufacture of large engineering work generally.

I think it would amply repay some of our engineers dealing with this class of work to look around and see if it is not possible to introduce this type of machine with advantage.

I will now conclude these few disjointed remarks by expressing the hope that some of our leading engineers in the room who have this kind of work to deal with, will give us their opinion of this subject, so that we can learn what is being done to facilitate the production of work in this direction.

DISCUSSION.

Mr. E. P. Hetherington said he was interested in the paper, because he had been trying to scheme out something of the same sort. He quite endorsed the remarks as to the utility of electrically driven tools, but they were dependent, as they all knew, upon the abilities of the electrical engineers and what they were prepared to do, and upon machine tool makers being prepared to give machines that would answer clients' special requirements. They had not got far in the way of electrically driven tools in textile work. The dynamos themselves added considerably to the capital cost if they drove their machine tools electrically.

With reference to his visit to the United States, what took his fancy there, he saw reversing described in the *American Machinist* that day, was an electrical clutch for planing machines. The great drawback to its application was the cost of the clutch in comparison with the price of the machine.

The question of reversing motions had taken up a lot of thought and time amongst engineers, but he found that electricians could not give them at present armatures to reverse at the speed the tool maker required. The great trouble he had found so far in the motors was that the electricians did not give them enough variations in the speeds, especially for drilling machines, where there was a great variety of work.

Mr. A. P. Loscher said that in dealing with heavy castings a good many manufacturers had taken up the question of portable machines lately. There was a great advantage in bringing the tool to the work, say in the case of a large casting which had to be machined from many different sides and in many different parts, and in awkward positions. In such cases portable machine tools were of the greatest importance, and had been greatly neglected up to now. Just lately, however, a few manufacturers had taken up portable machine tools with the idea of cheapening manufacture He had a certain machine under consideration at the present time. A certain class of work, which was now done on a turning and boring mill took 16 hours to finish, but he was told it could be done by a certain portable machine tool in two or three hours. As far as his judgment as a tool maker went he should say it would do it quite easily. The whole time was saved mainly by avoiding re-chucking. He could take a heavier cut on the Bullock machine—it was stiffer—but he lost that advantage by the different methods of re-chucking. He should say that portable machine tools had a great future before them, especially considering the advantage of bringing the tool to the work for awkward places instead of having to shift the whole casting.

Mr. Chas. Day said as to the electric driving of planing machines, Mr. Hetherington had remarked that motor manu-

facturers would not supply motors for reversing them. He did not know that it was altogether a case of defect in the motor, but he thought it would be absolutely wrong to try to reverse a motor for a planing machine, and that was the great point of the Riddel magnetic clutch In dealing with light, or moderately heavy planing machines, the energy of the moving parts was mainly contained in the revolving pulleys and wheels; it was not in the reciprocating table. Therefore if they wanted a good reversal they must not try and reverse those high-speed rotating parts; they should always run in one direction. That, he understood, was the feature of the Riddel clutch. It did not reverse the high-speed parts at all, but simply the table, which was the only part they required to reverse. As to portable tools it was open to question whether there was a very great money saving from them, except in work such as large dynamo building, where, he believed, there was a saving.

On the majority of jobs in an ordinary engineering works, he did not see that there would be a great saving in money, because, as a rule, a planing machine or a slotter that was a permanent fixed structure would do planing and slotting work better than a portable tool. Of course the great advantage of portable tools came in as regards output, and that was a very big advantage. If they got a large dynamo frame through in two weeks instead of six weeks, it would be a great help to any firm. If it were possible to get several operations on at once, though it cost 5% more, they would be much better off on the whole.

Mr. Sam Boswell said he took it that a "portable" tool was something they could take in a barrow to a job, whilst some other machine was in action at the same time, as, for instance, if they took a drilling machine to a casting while it was on a

planing machine. Portable tools that could be carried about were as yet only in their infancy. They were, however, being adapted in many cases for different purposes, and without doubt there was a great future before them. They might be driven by electricity or compressed air. He preferred the latter, for more reasons than one. Electric wires were not very safe to handle, except by experts, whereas with compressed air there was no likelihood of much damage. Some of the compressed air tools would work with steam as well as compressed air. It was scarcely a portable tool, however, if it required a two-ton crane to carry it about the shop. It should be capable of being put in a barrow and set to work in any position while something else was being done. The machines described were fixed, after all. He did not think they would do their work unless fastened down somewhere, so that they really became fixed tools.

Mr. J. Vose thought the question of portable tools opened out a wider subject. Their past President (Mr. Hodgson) in one of his addresses. had commented upon what would be one of the future needs of our engineers, the command of large available capital for what they wished to do. They must look more at the importance of getting things out quickly. An American firm who made locomotives admitted their locomotives were not so economical as the English locomotive, but they said that was not the point. The final result must be considered. Their uneconomical locomotive would pull much greater loads than any of the English locomotives, and the result was that at the end of the year the railways made more money than those using the economical locomotive, and made each item pay for itself as they went along. It was on that line that economy must be expected from portable tools of the character described, whether the net result at the end of the year would be better.

In many cases perhaps it might not be economical. Although a job could be done more quickly by portable tools, there might be a case where an object could be produced more cheaply by taking a long time over it, because they were able to wait the longer time. The question opened out a wide field for the manager or other official, and they had to consider whether quickness or cheapness was required, according to varying circumstances.

Mr. Hetherington had hinted at the desirability of the electrician and mechanical engineer working together and each placing his difficulties before the other, and giving and taking a little. The electrician should recognise that an artistic success was not exactly the object the producer was trying to gain.

The President (Mr. E. G. Constantine) said it appeared to him there was a very wide field for the application of portable machine tools. It resolved itself into a question of being able to turn out work quicker where its nature was such that one or more of these tools could be kept constantly employed. If a piece of work could be turned out in a week instead of six weeks, although each operation costs 5 % more, it would appear that in the aggregate there must be a considerable saving in money. Always providing the capital was forthcoming there was the advantage of an increased output, and the present tendency, as they knew, was towards a diminution of the percentage of profit, but an increase in the aggregate of work turned out. In marine engineering and shipbuilding, portable machine tools, if riveting tools, drilling machines, &c., could be included, were used to a very considerable extent indeed. If firms had the necessary capital he failed to see why they could not go into this matter and effect a considerable saving by laying down suitable portable machine tools for dealing with this heavy work.

Mr. Ingham, in his reply, said that his firm had been giving some attention to the merits of the magnetic reversing clutch mentioned by Mr. Hetherington, but had come to the conclusion that it was too expensive to adopt on the machines mentioned in this paper; the friction clutch answering the same purpose with much less cost, was simple, and could be easily understood by any ordinary workman. He thought there might be some advantage in using the magnetic clutch on very heavy fixed machines where the moving parts for reversing became very heavy.

There was no doubt a great advantage to be gained by using portable tools on certain classes of work, and he thought that there were very few large engineering works but what could find some pieces which could be machined more economically in this manner if they would only take the trouble to consider the matter.

When passing through the engine works mentioned in the paper he noticed several very large castings which could have been dealt with very successfully by these portable machines, but had been faced, etc., on very large machines, in many cases with only one tool at work, whereas several portable machines could have accomplished the work in much less time, and all at one setting of the job.

With regard to the portability of these tools he might say that they could be moved about with the same ease as portable riveting or other machines of a similar class, and could be running whilst slung in the crane. Eye bolts were provided for lifting, and the edges planed true for facilitating the setting. Of course it is understood that a modern shop would be provided with good lifting tackle.

With regard to the raising of capital he did not think that it was necessary to raise much capital to get a few portable tools to work. It was not necessary to start off with a base-plate

in the centre of the shop. They could put the portable tools on to machines they already had, such as boring, side planing, wall planing machines, or any machine which was provided with a T slotted baseplate. There was generally plenty of baseplate to spare, where they could put one or more of these portable machines to work. There was no doubt in his mind that these machines would before long come to the front, and engineers would be bound to take them up on account of the requirements of quick delivery.

---

5 Plates follow illustrating this Paper.

RTABLE MACHINE TOOLS.

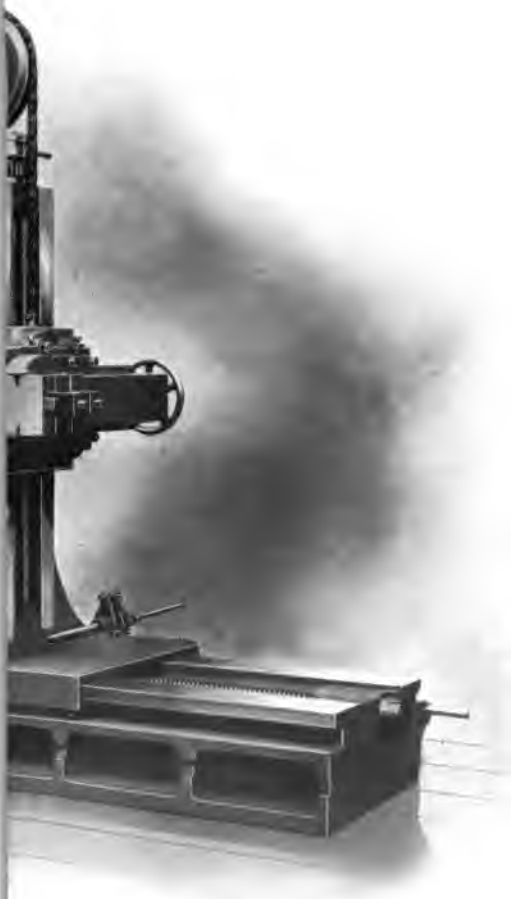

PLANING MACHINE.

UNIV. OF MICH.

Plate II.

PORTABLE MACHINE TOOLS.

LOTTING MACHINE.

UNIV. OF MICH.

OF PORTABLE MACHINE TOOLS.

TABLE DRILLING MACHINE.

UNIV. OF MICH.

Plate IV.

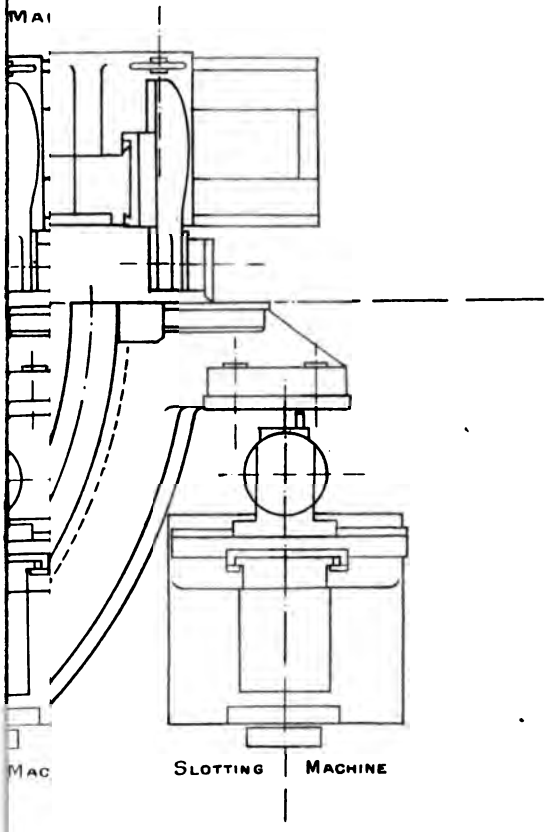

PORTA

UNIV. OF MICH.

PORTABLE MACHINE TOOLS.

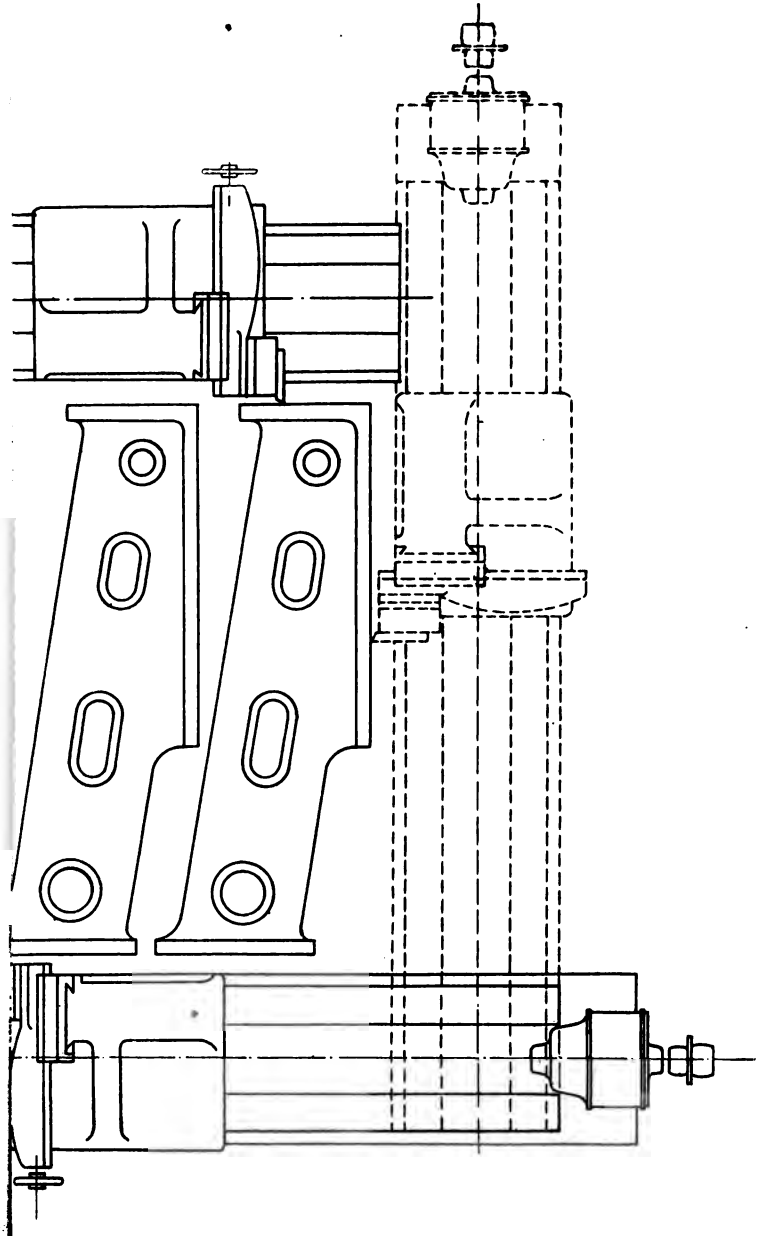

RDS OF LARGE VERTICAL ENGINES.

UNIV. OF MICH.

EFFICIENCIES OF ELECTRIC CRANES.

READ SATURDAY, MARCH 8TH, 1902,

BY

Mr. R. MATTHEWS,

(MANCHESTER).

A few years ago whilst negotiating for the purchase of a number of electrical cranes of various sizes, for Sir W. G. Armstrong, Whitworth & Co., Ltd., I was so surprised to find the vagueness and lack of information thereon that, it compelled me to decide, on ascertaining in a practical manner, the actual results of the following cranes with varying loads, as far as possible, without incurring too much delay and expense.

Owing to our electrical generating station having its steam supply from our general battery of boilers, and our lighting and power being taken from the same generators, it has prevented me treating the subject in a thoroughly academic manner, but the results put before you may be of some value, as they are the carefully recorded results of a large number of trials for each load that is given on the tables, and in no case has a single experiment been relied on for the data given.

Cranes Nos. 1, 2, 3, and 4 are all by different makers; and Nos. 1, 2, and 4 are in one shop, made up of seven Bays, all of which are about 225ft. long.

Nos. 1, 2, and 7 Bays have 70 ton cranes; Nos. 3 and 4, 30 ton cranes; and Nos. 5 and 6, 60 ton cranes.

The length covered by machines in this shop is about 200ft.

The Tables on Pages 67, 68, and 69 give the actual number of services, the time in hours, and the load in tons, during each

operation, over a period of 10 consecutive working days, which no doubt are of interest, by shewing in a large heavy-machine shop, principally consisting of heavy shafting, gun-boring, and turning lathes, etc., that there is a great amount of time during which the cranes are idle, consequently the element of first cost, *i.e.*, capital account, requires due consideration.

Before proceeding to give the results for the benefit of the members of this Association, I will first give you a general, rough, outlined description of each crane.

No. 1 is a three motor 70 ton crane, 50ft. span, having two ropes 1·125in. diameter on the barrel, which is 27in. diameter, and passes round four pulleys at the hook.

The crab has 30in. diameter travelling wheels, and the crane 48in.

The motors being series wound, vary in speed as given in the tables.

The lifting motor has a spur pinion, 1in. pitch, having 16 teeth gearing into a wheel of 80 teeth, driving a pinion about 1·75in. pitch of 13 teeth, gearing into a wheel of 67 teeth, which drives a pinion about 2·375in. pitch of 13 teeth, gearing into a wheel of 76 teeth on the barrel.

This crane has also a 10 ton light lift, having one 1in. rope on a 14in. barrel, with one rope pulley at the hook, driven by the motor pinion, about 1in. pitch, having 16 teeth geared into a wheel of 80 teeth which drives a pinion of 13 teeth, gearing into a wheel on the barrel shaft of 67 teeth.

The electromotive force of the electrical installation is about 220 volts.

The several tests in tables Nos. 1, 2, 3, 4, 5, and 6 were not made at the same time, but on different days, as suitable loads happened to be convenient.

The following Table shews the results of the loads put on this crane:—

No. 1.—Three Motor 70 Ton Crane.

Load in Tons.			Motion.		Power.			Efficiency %	Tractive force.	Revs. of Motor.
Lifted.	Travl'ng	Total.	Direct'n	Rate.	Amps.	Elec. HP.	HP on load.			
1·45	..	1·45	Hoist	7·66	14	4·12	·755	18·3	..	650
5·9	..	5·9	,,	8·25	24	7·08	3·3	46·7	.	700
11·4	..	11·4	,,	6·22	32	9·43	4·81	51	..	525
20·3	..	20·3	,,	3·75	28	8·36	5·18	62·2	..	318
32	..	32	,,	3·83	55	16·2	8·32	51·4	..	325
46·15	..	46·15	,,	2·75	51	15	8·62	57·4	..	234
63·85	..	63·85	,,	2·87	88	26	12·45	48	..	244
80·85	..	80·85	,,	2·56	95	28	14·05	50·2	..	217
—·07	..	—·07	,,	56	18	5·3	·26	5·0	..	..
4·5	..	4·5	,,	27	46	13·6	8·25	61	lbs. per ton.	..
10·0	..	10·0	,,	19	79	23·3	12·9	55·4		..
	18 tons	18	Trav'rse	97	10	2·95	..	..	56	..
5·9	,,	23·9	,,	86	10	2·95	..	..	47	..
11·4	,,	29·4	,,	93	11	3·24	..	..	39	..
20·3	,,	38·3	,,	73	12	3·54	..	..	42	..
32	,,	50·0	,,	79	13	3·84	..	..	32	..
46·15	,,	64·15	,,	55	15	4·43	..	..	41	..
63·85	,,	81·85	,,	57	18	5·3	..	..	37	Average
80·85	,,	98·85	,,	47	24	7 08	..	..	50	43
..	48tons	48	Travel	188	23	6·8	.	..	25	..
5·9	,,	53·9	,,	173	26	7·67	..	..	27	..
11·4	,,	59·4	,,	145	30	8·85	..	..	34	..
20·3	,,	68·3	,,	160	26	7·67	..	..	23	..
32·0	,,	80	,,	143	30	8·85	..	..	25	..
46·15	,,	94·15	,,	132	31	9·15	..	..	24	..
63 85	,,	111·85	,,	121	34	10·0	..	..	24	Average
80.85	,,	128·85	,,	118	40	11·8	..	..	26	26

The above results are represented by **Line 1 on Diagrams A, B, C, D, and E.**

No. 2 is a four motor 50 ton crane, 30ft. span, having two 1·625in. ropes on the barrel, which is 32in. diameter, and passes round two pulleys at the hook. The travelling wheels on the crab are 24in. diameter, and on the crane they are 36in. diameter.

The spur pinion on the motor shaft has 20 teeth about 1in. pitch, geared into a wheel of 84 teeth, driving a pinion of 13 teeth 1·75in. pitch, which gears into a wheel of 52 teeth,

which drives a double-helical steel pinion of 1·75in. pitch having 13 teeth geared into a wheel of 52 teeth, driving a pinion of 13 teeth, 2·5in. pitch, with helical teeth into a wheel of 78 teeth on the barrel.

This crane has a separate light lift motor for a load of five tons, having two ·75in. ropes on a barrel about 15·75in. diameter, with one rope pulley at the hook. It is operated by a motor having a four-threaded worm about 5in. pitch, geared into a worm wheel of 73 teeth, driving a spur pinion of 13 teeth, geared into a wheel of 57 teeth on the barrel shaft.

The following Table gives the results of the trials of this crane :—

No. 2. Four Motor 50 Ton Crane.

Load in Tons.			Motion.		Power.			Efficiency %	Tractive force.	Revs. of Motor.
Lifted.	Travl'ng	Total.	Direct'n	Rate.	Amps.	Elec. HP.	HP on load.			
1·05	..	1.05	Hoist	8·0	16	4·72	·57	12·1	..	688
6·5	..	6·5	,,	5.77	22	6·5	2·55	39·2	..	496
11·0	..	11·0	,,	5·34	25	7·36	3·98	54·0	..	460
20·7	..	20·6	,,	4·5	35	10·3	6·32	61·4	..	387
31·6	..	31·6	,,	4·0	50	14·75	8·58	58·2	..	344
45·75	..	45·75	,,	3·3	77	22·75	10·25	45·0	..	284
5 Ton Light Whip.										
·06	..	·06	Hoist'g	40·0	8	2·36	·16	6·9	..	765
1·02	..	1·02	..	23·2	11	3·24	1·61	49·7	..	443
2·27	..	2·27	..	17·8	15	4·41	2·74	62·1	..	340
3·1	..	3·1	..	16·3	18	5 35	3·43	64·7	..	312
4·33	..	4·33	..	14·9	22	6·5	4·38	67.3	..	285
5·3	..	5·3	..	13 3	27	8·0	4·79	59·7	..	254
Span too short for steady readings with light loads.										
1·05	17	18·05	Trav'rse	..	..	..	..	..	..	
6·5	,,	23·5	,,	..	..	..	..	..	lbs per	
11·0	,,	28·0	,,	..	..	..	..	..	ton	
20·7	,,	37·7	,,	90	10	2·95	..	..	29	
31·6	,,	48·6	,,	72	14	4·12	..	..	38	Average
45·75	,,	62·75	,,	55	16	4·72	..	..	45	37·3
1·05	34	35·05	Travel	115	15	4·42	..	..	37	
6·5	,,	40·05	,,	110	16	4·72	..	..	35	
11·0	,,	45·0	,,	107	18	5·3	..	..	37	
20·7	,,	54·7	,,	100	17	5·0	..	..	30	
31·6	,,	65·6	,,	82	24	7·08	..	..	44	Average
45·75	,,	79.95	,,	91	21	6·2	..	..	28	35·2

I.H.P.					
29·5	Normal speed of Hoisting motor was given as 400.				
8·85	,,	,,	Traversing	,,	,, 500.
6·2	,,	,,	Travelling	,,	,, 300.

5 Ton Light Whip.

		Amps.	I.H.P.
Specified Normal Speed of Motors Hoisting	500 —	48	14·1

The above results are represented by **Line 2 on Diagrams A, B, C, D, and E**; and for the five ton whip load on **Diagram F.**

No. 3 is a three motor 50 ton crane, 75ft. span, having two 1·5in. ropes on a 36in. barrel, and passes round two pulleys at the hook.

The following Table shews the results of the loads put on this crane.

No. 3.—Three Motor 50 Ton Crane.

Load in Tons.			Motion.		Power.			Efficiency %	Tractive force	Revs. of Motor.
Lifted.	Travl'ng	Total.	Direct'n	Rate.	Amps.	Elec. HP.	HP on load.			
1·6	..	1·6	Hoist	6·66	42	12·4	·72	6·	..	838
9·4	..	9·4	,,	6·17	44	13·0	3·94	30·3	..	775
17·6	..	17·6	,,	5·66	54	15·9	6·77	42·6	..	712
26·	..	26·	,,	4·8	63	18·6	8·48	45·6	..	604
32·85	..	32·85	,,	4·57	65	19·2	10·2	53·1	..	575
43·8	..	43·8	,,	4·33	77	22·7	12·9	56·8	lbs. per ton.	545
1·6	17·25	18·85	Travr'se	113	11	3·24	..	..	50	..
9·4	,,	26·65	,,	103	12	3·54	..	..	42	..
17·6	,,	34·85	,,	100	13	3·82	..	..	36	..
26·0	,,	43·25	,,	97	15	4·41	..	..	35	..
32·85	,,	50·1	,,	84	16	4·72	..	..	37	Average
43·8	,,	61·05	,,	77	19	5·6	..	..	39	40
1·6	66·25	67·85	Travel	250	57	16·8	..	..	32	..
9·4	,,	75·65	,,	196	70	20·6	..	..	46	..
17·6	,,	83·85	,,	180	72	21·2	..	..	46	..
26·0	,,	92·25	,,	196	78	23	..	..	42	..
32·85	,,	99·1	,,	166	79	23·3	..		47	Average
43·8	,,	110·05	,,	160	88	26	..	..	49	43·7

Specified normal speeds and powers:—

	Revs.	Amps.	I.H.P.	B.H.
Hoisting	500	82	24·2	20
Traversing	750	33	9·7	8
Travelling	500	82	24·2	20

The above results are represented by **Line 3 on Diagrams A, B, C, D, and E.**

The travelling wheels on the crab are 21in. diameter, and on the crane 36in. diameter. The lifting motor pinion has 26 teeth, 1in. pitch, geared into a wheel of 121 teeth, driving a pinion of 13 teeth, 2in. pitch, geared into a wheel of 105 teeth, driving a pinion of 12 teeth, 3in. pitch, geared into a wheel of 45 teeth, which drives a pinion of 12 teeth, 3·75in. pitch, geared into a wheel of 50 teeth on the barrel.

The light lift on this crane is arranged for 10 tons, and has a single 1in. rope on an 18in. barrel, arranged on the axle of a 34 teeth wheel, which is driven by a 23 teeth pinion on the axle of the 105 teeth wheel above mentioned.

No. 4 is a three motor 30 ton crane, 50ft. span, having two 1.125in. ropes on an 18·625 barrel, which passes round two pulleys on the hook. The travelling wheels on the crab and crane respectively, are 18in. and 36in. diameter.

The lifting motor pinion has 30 teeth, ·75in. pitch, geared into a wheel of 118 teeth, driving a pinion of 20 teeth, 1·125in. pitch, which gears into a wheel of 90 teeth, driving a pinion of 18 teeth, 1·75in. pitch, geared into a wheel of 54 teeth, which drives a pinion of 12 teeth, 2·5in. pitch, geared into a wheel of 54 teeth on the barrel; this crane has two speeds for large lifts also.

This crane has also a five ton light lift barrel on the axle of the 54 teeth wheel, of 1·75in. pitch, having one 1in. rope on an 11·75in. barrel.

The following Table shews the results of the loads put on this crane :—

No. 4. Three Motor 30 Ton Crane.

Load in Tons.			Motion.		Power.			Efficiency %	Tractive force.	Revs. of Motor.
Lifted.	Travl'ng	Total.	Direct'n	Rate.	Amps.	Elec. HP.	HP on load.			
·42	..	.42	Hoist	5·65	33	9·75	·16	1·64	..	330
			,,	3·25	31	9·12	·09	1·98		
5·8	..	5·8	,,	5·67	37·5	11	2·22	20·2	..	315
			,,	3·1	32	9·45	1.22	12·95		
10·4	..	10·4	,,	4·89	49·	14·5	3·46	23·8	..	280
			,,	2·75	42	12·4	1·94	15·7		
20·3	..	20·3	,,	2·41	49	14·5	3·3	22·8	..	245
26·2	..	26·2	,,	2·5	49	14·5	4·45	31·	..	254
31	..	31	,,	2·16	57	16·8	4·55	27·	..	219
·09	..	·09	Hoist	36	33	9·75	·22	2·2	..	..
2·9	..	2·9	,,	13·3	53	15·6	2·62	16·8	lbs.	..
5·5	..	5·5	,,	11	62	18·3	4·1	22·4	per ton	..
·42	12	12·42	Trav'rse	103	6	1·77	..	..	45·6	..
2·9	,,	14·9	,,	79	5	1·47	..	..	41·2	..
5·8	,,	17·8	,,	93	6	1·77	..	..	35	..
10·4	,,	22·4	,,	70	6	1·77	..	..	37	..
20·2	,,	32·2	,,	54	9	2·65	..	..	50·3	..
26·2	,,	38·2	,,	50	12·5	3·69	..	..	63·8	Average
31·	,,	43	,,	42·5	13	3·82	..	..	69	48·8
·42	34	34·42	Travel	250	26	7·64	..	..	29	..
2·9	,,	36·9	,,	273	19	5·6	..	..	18·4	..
5·8	,,	39·8	,,	273	20	5·9	..	..	18	..
10·4	,,	44·4	,,	214	24	7·08	..	..	24·7	..
20·2	,,	54·2	,,	182	28	8·24	..	..	27·7	..
26.2	,,	60·2	,,	166	42	12·4	..	..	41	Average
31	,,	64	,,	155	46	13·53	..	..	45	29·1

Specified normal speed of Hoisting 300 revolutions 10 B.H.P.
,, ,, Traversing 500 ,, 8 B.H.P.
,, ,, Travelling 500 ,, 8 B.H.P.

The above results are represented by **Line 4 on Diagrams A, B, C, D, and E.**

No. 5 is an old rope crane, of 40 tons capacity, having a 45ft. span, to which we attached a motor.

The shop is about 300ft. long. The driving consisted of a 28in. rope pulley driving a 37in. pulley, having 27in. belt pulleys on the crane driving a single worm, 1·75in. pitch, geared into a wheel of 30 teeth, driving a spur pinion of 12 teeth, 2·25in. pitch, geared into a wheel of 32 teeth, driving a

pinion of 2·75in. pitch having 12 teeth, geared into a wheel of 28 teeth, which drives a pinion of 12 teeth, 3·75in. pitch, geared into a wheel of 45 teeth on the barrel, which is 30in. diameter, and has two 1·375in. chains, with two pulleys, on the hook.

The following Table shews the results of the loads put on this crane.

No. 5.—40 Ton Rope Crane.

Load in Tons.			Motion.		Power.			Efficiency %	Tractive force.	
Lifted.	Travl'ng	Total.	Direct'n	Rate.	Amps.	Elec. HP.	HP on load.			
1·15	..	1·15	Hoist	5·22	57	16·8	·41	2·43	..	..
2·3	..	2·3	,,	5·22	58	17·1	·81	4·74	..	..
3·5	..	3·5	,,	5·33	64	18·9	1·27	6·7	..	..
6·88	..	6·88	,,	4·9	67	19·8	2·29	11·56	..	..
10·75	..	10·75	,,	5·2	87	25·6	3·8	14·85	..	..
14·8	..	14·8	,,	4·45	95	28·0	4·47	16·0	..	..
18·1	..	18·1	,,	4·83	122	36	5·94	16·7	..	..
Gear changed to slow speed for heavy loads.										
26·95	..	26·95	,,	2·5	107	31·6	4·52	14·3	..	..
33·2	..	33·2	,,	2·06	112·5	33·1	4·64	14	..	..
43·25	..	43·25	,,	1·92	158	46·6	5·6	12·02	..	..
1·15	9.	10·15	Travr'se	53	56	16·5		..	1012	These figures include the power absorbed in driving Ropes and Belts. For nett traction the equivalent of this power needs deduction.
2·3	(App.)	11·3	,,	53	56	16·5	..	..	909	
3·5	..	12·5	,,	53	58	17·1	..	..	852	
6·88	..	15·88	,,	53	55	16·2	..	..	636	
10·75	..	19·75	,,	53	60	17·7	..	..	558	
14·8	..	23·8	,,	53	59	17·4	..	..	455	
18·1	..	27·1	,,	53	58	17·1	..	..	393	
26·95	..	35·95	,,	50	62	18·3	..	..	335	
33·2	..	42·2	,,	50	63	18·6	..	..	291	
43·2	..	52 25	,,	50	72	21·2	..	..	268	
1·15	24	25·15	Travel	56	52	15·3	..	..	359	
2·3	..	26·3	,,	60	52	15·3	..	..	320	
3·5	..	27·5	,,	57	55	16·2	..	..	350	
6·88	..	30·88	,,	57	51	15·04	..	..	280	
10·75	..	34·75	,,	56	58	17·1	..	..	290	
14·8	..	38·8	,,	57	51	15·04	..	..	224	
18·1	..	42·1	,,	58	54	15·9	..	..	215	
26·95	..	50·95	,,	56	54	15·9	..	..	184	
33·2	..	57·2	,,	52	59	17·4	..	..	193	
43·25	..	67·25	,,	53	60	17·7	..	..	164	

Note.—Motor only, takes 12 Amps. = 3·54 HP. (Speed of Motor 585.)
Motor rope belts ,, 47 ,, = 13·85 = 10·31 for ropes and belts.

The above results are represented by **Line 5 on Diagrams A, B, and C.**

A change of gear is arranged by changing from the 12 teeth pinion and 32 teeth wheel, to 19 teeth pinion and 26 teeth wheel for lighter loads.

The travelling wheels on the crab are 20in., and on the crane 30in. diameter.

The motor in this case is a shunt motor, running about 585 revolutions per minute, and giving a rope speed of 4,300ft. per minute.

The diameter of the rope is 1·125in., and about 650ft. in length, which is only driven when actually in use.

The following Table shews the results of the loads put on this crane.

No. 6.—5 Ton Crane.

Load in Tons.			Motion.		Power.			Efficiency %	Tractive force.	Revs. of Motor.
Lifted.	Travl'ng	Total.	Direct'n	Rate.	Amps.	Elec. HP.	HP on load.			
·06	..	·06	Hoist	41·25	17	5·02	·168	3·34	..	856
1·04	..	1·04	,,	29·5	22	6·49	2·08	32·1	..	614
2·29	..	2·29	,,	21·33	32	9·44	3·31	35·1	..	444
3·12	..	3·12	,,	20·66	35	10·3	4·37	42·5	..	430
4·35	..	4·35	,,	18·5	42	12·4	5·46	44	..	385
5·32	..	5·32	,,	16·0	40	11·8	5·82	49·3	lbs. per ton.	333
·06	2·5	2·56	Trav'rse	220	4	1·18	..	..	69	..
1 04	..	3·54	,,	177	5	1·47	..	..	77·4	..
2·29	..	4·79	,,	126	5	1·47	..	..	80·3	..
3·12	..	5·62	,,	118	6	1·77	..	..	88	..
4·35	..	6·85	,,	118	6	1·77	..	..	72	Average
5·32	..	7·82	,,	111	6	1·77	..	..	67	75·6
·06	10·5	10·56	Travel	200	10	2·95	..	..	46	..
1·04	..	11·54	,,	193	10	2·95	..	..	44	..
2·29	..	12·79	,,	180	10	2·95	..	..	42	..
3·12	..	13·62	,,	180	11	3·24	..	..	43	..
4·35	..	14·85	,,	159	11	3·24	..	..	45	Average
5·32	..	15·82	,,	154	12	3·54	..	..	48	44·6

			Amps.	HP.
Specified normal speeds:	Hoisting	600	45	13·2
	Traversing	400	14	4·1
	Travelling	400	26	7·7

The whole of the above results are shewn diagramatically on **Diagram G.**

No. 6 is a five ton crane, with girders and crab strong enough for 10 ton, so that for odd jobs a snatch-block can be used for the heavier lift.

It is 40ft. span, has two ·75in. ropes on a barrel 16in. diameter.

A series-wound motor drives a treble-threaded worm, geared into a wheel of 75 teeth, driving a spur pinion of 13 teeth, 1·75in. pitch, geared into a wheel of 65 teeth on the barrel.

The travelling wheels on the crab are 18in. diameter, and on the crane 22in. diameter.

No. 1 Bay contains 6 Machines of an average rate of 2/- per hour including man.

Tuesday.	Wednesday.	Thursday.	Friday.	Sat. and Mon.	Tuesday.	Wednesday.	Thursday.	Friday.
Hrs. Weight.	Hrs. Weight.	Hrs. Weight.	Hrs. Weight.	Hrs. Weight.	Hrs. Weight.	Hrs. Weight.	Hrs. Weight.	Hrs. Weight.
·5 × 1·	·5 × ·5	1 × ·5	1· × 15	·5 × 7	·5 × 1	·33 × 2·	1· × 13	·25 × 2
·17 × ·5	·5 × 8	1 × ·5	·5 × 5	·17 × ·1	·5 × 2	·16 × ·2	·17 × 4	·25 × ·5
·17 × ·5	·5 × ·5	3 × 12·	·33 × ·5	·5 × ·3	·5 × 2	·33 × 2·	·17 × 2	·16 × ·2
·17 × ·5	·17 × ·5	·5 × ·5	·33 × ·5	·17 × 3·	·33 × 2	·5 × 7	·33 × 2	·5 × 6
·5 × 1·	·66 × ·5	1· × ·25		1·5 × 3·5	·5 × ·1	·33 × ·5	·25 × 2	·75 × 5
		·17 × ·5		·17 × 1		·17 × ·1	·33 × 2	1· × ·15
				·17 × 2			·25 × 2	·5 × 3
							·17 × 4	·5 × 1
							·17 × 3	·17 × ·35
							·25 × ·4	·17 × ·1
								·25 × ·2
								·25 × ·15
*1·51	2·33	6·67	2·16	3·18	2·33	1·82	3·09	4·75

Total number of times used = 60,

No. 2 Bay contains 8 Machines of an average rate of 2/6 per hour including man.

·17 × ·25	·25 × ·1	·16 × ·1	·17 × 1·	·75 × ·1	·5 × 4	1·5 × 28	·5 × ·1	·25 × ·1
·5 × 18	·17 × ·1	·25 × 10	·25 × 3·	·25 × 5·	·25 × ·3	·5 × 28	·25 × 10	·25 × 10
·25 × ·75	3· × 5·	·5 × 1	·5 × 10·	·25 × 10·	·25 × 9	1· × 2	·5 × ·1	3·5 × 28
·75 × ·25	·75 × ·5	·17 × ·5	·25 × 1·	3· × 9·	2· × 10	·25 × ·3	2·75 × 25	·25 × ·1
·17 × ·25	·75 × ·1	1 × 30	·5 × 2·	·75 × ·1	1· × 10	·25 × 16		·5 × 10
1· × ·25		·5 × 20	·25 × 18·	·25 × 10·	·25 × 16	·5 × 10		1· × 28
.5 × 10		·25 × 1		·25 × 8	·5 × 12	·25 × ·1		·25 × ·1
3 × 5		·17 × ·2		1·5 × 28·	·25 × ·1	1· × 16		·5 × ·1
·25 × 1		·17 × 10		·25 × ·2	1·5 × 10			
·75 × 10·					·5 × 8			
		·5 × ·1						
*7·34	4·92	3·67	1·92	7·25	7·	5·25	4·	6·5

* Hours worked per day.]

Total number of times used 70.

No. 3 Bay contains 15 Machines of an average rate of 1/6 per hour including man.								
Tuesday.	Wednesday.	Thursday.	Friday.	Sat. and Mon.	Tuesday.	Wednesday.	Thursday.	Friday.
Hrs. Weight.	Hrs. Weight.	Hrs. Weight.	Hrs. Weight.	Hrs. Weight.	Hrs. Weight.	Hrs. Weight.	Hrs. Weight.	Hrs. Weight.
·5 × 1· ·33 × 2· ·75 × 1· 1·33 × 1· ·17 × 1·	·75 × 1 ·75 × 2 ·25 × 1 ·5 × 7·5 2·25 × 2	·75 × 1 ·5 × 1 2· × 30 ·5 × 7·5 ·5 × 1 ·75 × 1	Under Repairs.	1 × 2·2 1 × 7 1 × 1·2 ·25 × ·1 ·66 × 7 ·1 × ·3 1 × 7 ·5 × 2·4	·25 × 2·4 ·25 × ·5 3·5 × 2 ·6 × 7 ·1 × ·2	·25 × ·3 ·75 × 1·5	·5 × ·7 ·25 × 2 ·2 × 2·5	·2 × 2 ·25 × ·7 ·2 × 2·
*3·08	4·5	3·		5·51	4·7	1·	·95	·65
Total No. of Times used = 37.								
No. 4 Bay contains 6 Machines of an average rate of 2/- per hour including man.								
1 × 1	·5 × 8 2 × 1 ·5 × ·1 1·5 × ·4	1 × 1 ·25 × 7·5	·25 × ·1	3 × ·1 1 × ·1 ·5 × ·1 1·5 × ·6	·25 × 7·5 2·5 × 4 ·25 × 2 ·5 × 7·5	1· × ·5 1 × ·1	1·5 × 2·5 ·5 × ·1 ·5 × ·1	·75 × 7·5
*1	4·5	1·25	·25	6	3·5	2	2·5	·75
Total No. of times used = 22.								
No. 5 Bay contains 8 Machines of an average rate of 2/- per hour including man.								
	·5 × 10 ·5 × 3	·25 × 2 ·25 × 1		·25 × 1	·25 × 5 ·25 × 8 1 × ·1 1 × ·6 ·5 × ·35	1 × ·1	·25 × 8 1 × ·1	·5 × 2 1 × 4 ·25 × 2
	*1·	·5		·25	3·	1·	1·25	1·75

* Hours worked per day.] Total No. of times used = 16.

No. 6 Bay contains 4 Machines of an average rate of 2/6 per hour including man.

Tuesday.	Wednesday.	Thursday.	Friday.	Sat. and Mon.	Tuesday.	Wednesday.	Thursday.	Friday.
Hrs. Weight. ·5 × 10 1·5 × 4 ·5 × ·5 1 × 3·	Hrs. Weight. ·75 × 10 1·5 × 3	Hrs. Weight. 1·5 × 3 1 × 30	Hrs. Weight. 1·5 × ·1 2·5 × 2·1	Hrs. Weight. ·5 × ·2	Hrs. Weight.	Hrs. Weight. 1 × 3	Hrs. Weight. ·25 × 3 ·5 × ·2 3 × 8 2·5 × ·3	Hrs. Weight. ·5 × ·3 4·5 × 5 1 × ·1 ·5 × ·2 ·5 × ·2
*3·5	2·25	2·5	4	·5		1·	6·25	7·

Total numbers of times used = 21.

No. 7 Bay contains 4 Machines of an average rate of 3/- per hour including man.

1·5 × 1 ·5 × 1 ·75 × 2 ·25 × 3	·5 × 10 1· × ·5 ·75 × 1·	2·5 × 28 1·5 × 1	3 × 1 1·5 × 1	·75 × 3 1 × 9 1 × 3·5	1·5 × 1·5 2·5 × 28 ·33 × 1	1·5 × ·3 4 × 5 ·5 × ·1	·5 × ·4 ·25 × ·25	2·5 × 2
*3	2·25	4·	4·5	2·75	4·33	6·	·75	2·5

* Hours worked per day.]

Total number of times used = 23.

In serving either boring or rifling machines and lathes the greater part of the time is taken up waiting for the work being fixed, consequently it is difficult to make a financial or commercial comparison of the efficiencies of electric cranes, compared with rope cranes such as No. 5. However as each service consists of taking work out which needs little lifting, traversing and travelling to lay the work on the floor, then lifting 4 or 5ft., travelling and traversing whilst putting in the machine; it is evident that the gain in the electric crane will be due to the time saved in the above operations, *i.e.*, whilst the man and the machine are idle; the remainder of the time fixing and securing being the same whatever kind of crane is used.

Therefore, to make a fair comparison we will assume an all round average of each service, that a lift of 10ft., a cross traverse of 40ft., and a longitudinal travel of 80ft. is made; and from the number of services shown on Pages 67, 68 and 69 we are able to get the average annual number of services which, together with the above assumption, we are able to arrive at the results given in the following Tables.

Interest on both capital and depreciation is taken at 5 per cent., and for repairs at 2·5 per cent.

Power is charged at 1·5 pence for electrical, and for steam power ·5 pence per horse power per hour.

The loss on man and machine whilst idle is taken from an average value of the machines, including the man's wages.

No. of Bay.	Annual No. of Services.	Feet Lifted per annum.	Feet Traversed per annum.	Feet Travelled per annum.	Electric. Equivalent in Hours worked.	Hours Man and Machine idle.	Rope. Equivalent in Hours worked.
1	1710	17100	68400	136800	61·45	57·05	118·5
2	1995	19950	79800	159600	72·3	66·7	139·0
3	1184	11840	47360	94720	50·5	28·5	79·
4	627	6270	25080	50160	26·725	15·105	41·83
5	456	4560	18240	36480	21·2	9·3	30·50
6	598	5985	23940	47880	27·85	13·68	41·53
7	655	6555	26220	52440	23	23	46

Annual cost of Electric Cranes.

Number of Bay.. ..	No. 1.	No. 2.	No. 3.	No. 4.	No. 5.	No. 6.	No. 7.
Power of Crane.. ..	70 tons	70 tons	30 tons	30 tons	50 tons	50 tons	70 tons
Interest on Capital ..	£100 0 0	£100 0 0	£60 0 0	£60 0 0	£90 0 0	£90 0 0	£100 0 0
Depreciation	100 0 0	100 0 0	60 0 0	60 0 0	90 0 0	90 0 0	100 0 0
Cost of Repairs	50 0 0	50 0 0	30 0 0	30 0 0	45 0 0	45 0 0	50 0 0
Cost of Power	2 7 0	3 3 0	2 5 0	1 4 7	0 12 4	0 18 1	0 18 0
Annual Charge	£252 7 0	£253 3 0	£152 5 0	£151 4 7	£225 12 4	£225 18 1	£250 18 0

Annual cost of Rope-driven Cranes.

Interest on Capital ..	£75 0 0	£75 0 0	£45 0 0	£45 0 0	£67 10 0	£67 10 0	£75 0 0
Depreciation	75 0 0	75 0 0	45 0 0	45 0 0	67 10 0	67 10 0	75 0 0
Cost of Repairs	37 10 0	37 10 0	22 10 0	22 10 0	33 15 0	33 15 0	37 10 0
Cost of Power	4 7 0	5 4 9	2 13 8	1 8 8	1 1 9	1 10 2	1 13 9
Loss due to Man and Machine being idle	5 14 0	8 6 9	2 2 9	1 10 3	0 18 7	1 14 3	3 9 0
Annual Charge	£197 11 0	£201 1 6	£117 6 5	£115 8 11	£170 15 4	£171 19 5	£192 12 9

The above results are shown graphically on **Diagram H.**

In conclusion I wish it to be distinctly understood that the object of this paper is neither to favour electric or rope cranes, but to get at the truth as far as possible from the actual cranes before mentioned, which tend to convey to my mind at least that for serving machines of large size, principally engaged on long operations, cranes of small capital outlay appear to be advantageous, provided they are reliable.

Referring to **Diagram A**, Nos. 1 and 2 are the most economical, and in my opinion the maximum of efficiency being at about 20 tons, are preferable to Nos. 3 and 4, whose maximum efficiency are at higher loads.

Diagram D shows No. 4 somewhat to disadvantage, as the motor is small and overloaded with the higher loads.

Diagram F is especially interesting, as I had this made with a very coarse pitch worm, having four threads (being a believer in coarse pitches for driving screws and worms), this attains the maximum efficiency of 67·3 per cent.

Diagram H shows the annual charges of electric and rope cranes for the same operations, and I am bound to admit that the good old and reliable friend, the rope crane, shows up very much better than was expected; no doubt the fact of the tools being engaged mostly on oil-hardened material necessitating long spells without interruption is in its favour; but for erecting and light machine shop work, or where services are often and quickly wanted, the electric crane will be preferred.

I hope that the members present will be able to add to the efficiency of this paper, and make it useful to students and others as a means of getting profitable and reliable information.

DISCUSSION.

Mr. Alfred Saxon said that Mr. Matthews had mentioned that the motors on the first crane were series wound, but had not stated whether this was the case with the other electric cranes. A point that struck him with reference to the cranes dealt with was their infrequent use. In a works like Armstrong, Whitworth & Co's, where very heavy material was dealt with, that might apply, but it would not, he thought apply at all largely in the engineering trade, and where there was plenty of work for it the electric crane would give by far the most efficient service.

In connection with the cranes at their own works they had a rope crane driven in a somewhat similar manner to the one referred to in the paper, and also an electric crane. He had not made any tests, but he had no doubt that the rope driven crane at their works would show a low efficiency as compared with the electric crane.

Mr. Daniel Adamson said Mr. Matthews had given some figures as to the extra cost of running electric cranes as compared with rope cranes, and also the amount of time saved with the electric crane. Presumedly Mr. Matthews wished them to base their estimate, as to the money saved, on the number of hours saved multiplied by the rate per hour for the machines, the average for which was given at about 2/- per hour including man. He took exception to that figure of 2/-. He had gone into the rating of the machines in two bays in their own works that morning. In a bay 200ft. × 45ft. they had 14 machines, served by electric cranes, and the average rating of these, including labour and shop charges—which, he supposed, were, or should be, included in the 2/- mentioned—amounted

to 2/7. In another bay, with 17 machines, the rating was 2/- each per hour. Now Mr. Matthews had only an average of about seven machines in each bay, and each bay was considerably larger than their own shops, so that the machines must be much larger, &c., therefore he maintained 2/- per machine was too small for the class of machine in the shops quoted by Mr. Matthews. The fixed charges, interest on buildings, rent and cost of lighting would all, he should imagine, be very much higher. So far as he could judge the 2/- should be considerably increased, and if that were done there would be very little difference between the electric crane and the rope crane as regards the cost of handling work, when they took the time lost by the machine with the rope crane into account. That would be so even in the shops named in the paper, where the number of services per annum was never more than 1,700, and came down to as low as 400 lifts. How did that compare with an ordinary workshop? He had the lifts made by their own cranes counted that morning and found, in a bay 200ft. long, where there were three cranes, that each crane made an average of 33 lifts in two hours—say 16 per hour for each crane. On the basis of 300 working days, that meant about 43,200 lifts per annum. The foreman, he might mention, told him that the number that morning was below the average. Anyhow the number was far beyond Mr. Matthews' figure.

In another bay of the same size there were 24 lifts in two hours, 12 per hour, which meant, say, about 32,400 per year of 300 days, at nine hours per day. Again a certain moral effect was produced in a workshop where the machines, whether cranes or other apparatus, were running at a reasonable speed. If they had a crane running at 50ft. per minute, as with a rope crane, in one shop, and an electric crane running at 150ft. per minute in another, they would find that where the quicker

running crane was in operation the men were brisk at their work. Where the cranes ran merrily the men seemed to get along faster and got more work done even with the same plant. In installing cranes they had not merely to look to the average conditions, but to the maximum conditions that would have to be dealt with, because if they had not sufficient crane capacity to deal with the maximum conditions, the men very soon got into the habit of waiting for the crane—a habit which was very easily got into.

Mr. F. W. Reed observed that in the main what he had been able to arrive at as to the efficiences of electric cranes seemed to coincide with what was given in the paper. Generally the efficiencies of the electric cranes as given seemed, however, to come out rather low on the smaller loads, and he would like to put it to Mr. Matthews whether he had been careful in getting the switch right over on the short circuit when lifting these light loads. They would get very wrong if they were not careful on that point. Some crane drivers were afraid of putting the switch right over to short circuit lest the motors should run too fast.

With regard to the crane No. 2, a very high efficiency was given for the light loads. He noticed that the light load was geared up with the much-abused worm wheel. Some engineers consider this was not the right way, but from the figures given the crane had rendered a good account of itself. The number of hours during which the cranes described were worked seemed very small. In their own works the cranes were scarcely stopped at all during the day.

He was glad to hear Mr. Matthews say a good word for the rope crane. It was not quite dead yet, though he would not advocate it for all purposes. In a shop of average length, say 150ft., with a properly designed crane and rope, running at a

proper speed, they could get 35% of efficiency (he had found that to be so from actual tests); and drive the rope with an expenditure of six BHP per hundred feet of shop. Some misleading statements were sometimes made in speaking of rope v. electric cranes, by comparing modern electric cranes with very bad examples of rope cranes. Of course the multiple motor electric crane was the one to use where they had to make a good many lifts and do them quickly, and especially in a long shop, as loss in conducting would not be nearly so great as with a rope.

Mr. T. Mannock observed that Mr. Matthews got a very good efficiency from the 4-motor crane with worm gear. They would scarcely expect to get that with worm gear of ordinary construction. When worm gear got to four threads it was more like screw gear than a worm, and there was nothing of the advantage of the worm in it as regards not running down. He therefore did not see what was to be gained by the worm wheel in this connection, except perhaps the changing of direction of the shafts might be an advantage.

With a large crane driven by a large motor there would not be the same efficiency for the light loads. Messrs. Armstrong, Whitworth's had a four-motor crane in the plate shop, which had a 10HP light load motor, which was driven by spur gear. That would no doubt give much better results than the one described, although the results with the worm gear were very good indeed, and rather a surprise. If he remembered rightly the worm was in the bottom of the oil box. In some experiments with electric cranes, with the worm in the bottom of the oil box, he found, with no load on the crane, a very considerable resistance, and had some difficulty in finding where this resistance was. It was a high speed worm—1,000 revolutions. At last he emptied the oil out of the box and the

resistance all disappeared! They were making electric hoists and putting the worm at the top.

He had made experiments with some cranes at their works to find out how the resistance was divided as between the rolling of the wheel on the rail and the friction of the axle. He found that the axle was taking nearly all the resistance, the rolling of the wheel scarcely any. In estimating the resistance of a crane they took the diameter of the wheel and the proportion to the diameter of the axle. Out of 17% friction, only about 1 or 1½% would be rolling friction. In consequence of this a larger crane would always go easier, because the axle did not increase in diameter in proportion to the strength—the breaking strain increasing as the cube of the diameter. Therefore with larger cranes they would always get less resistance.

As to rope cranes, Mr. Matthews got 16·7 per cent as his highest efficiency. In very careful experiments made at their works they got 16·36 per cent with a rope crane with the worm wheel running in oils. He thought, therefore, Mr. Matthews figure might be taken as fairly representative. As Mr. Adamson had pointed out, Armstrong, Whitworth & Co's works were scarcely a fair criterion as to the conditions under which cranes were usually employed. The electric cranes there were not used anything like so frequently as they would be in an ordinary engineer's shop, and consequently they did not get the work out of them that was possible.

Mr. A. Rea remarked that in calculating the average efficiency of each crane better results would be shown if what he might call the "no load" tests were left out. As an example the average efficiency of No. 1 crane, ignoring the "no load" test would be 52·2, whereas if included the average results dropped to 48·18 per cent. of useful effect only, as given by Mr. Saxon. He considered therefore that it was hardly fair

to include the "no load" tests when taking the average general results in the manner mentioned.

In reference to the motors, if not making too free with Mr. Matthews' good nature, he should like to know the efficiency of each hoisting motor when running at the different speeds from the normal, as it is well known that putting resistances into the armature of a series wound motor for reducing the speed also reduces the efficiency of the motor very considerably.

He had an idea with regard to high-class crane motors that they should be made thinner in section, and somewhat larger in diameter than generally adopted, so that six poles could be introduced, etc., etc., giving a better diffusion of the magnetic flux or pull on the armature, and so on.

Where this was done very much higher results accrue from slow running motors for several reasons.

With respect to the figures attained for the No. 2 crane, he considered the efficiency would have been higher if spur gearing had been used throughout as helical gears, especially where of small diameter, absorb considerably more power in friction than spur gears, the arc of the teeths approach being so much longer.

In reference to the results given for the No. 4 crane, these were considerably below the others, although comparatively little variation in the speed of the motor seems to have taken place. It is just possible therefore that in this case the motor itself may have given low results.

Personally, however, he was most optimistic with regard to the electric crane, as there could be no doubt of its superiority for general purposes over all others. At the same time it must be admitted that a high-class rope crane, with cut gears and well-designed worm gearing—which would take no more friction than ordinary gearing—was not so bad in efficiency as it was painted, although as far as adaptibility and speed were concerned it could not compare with its electric rival.

Mr. W. Spencer thought Mr. Matthews had dealt fairly with both types of crane. Personally he was perfectly satisfied that as regards efficiency the electric crane was far in advance of the rope crane. He differed from Mr. Rea as to being able to get practically the same efficiency out of worm as spur gearing.

Mr. John Watson said that when comparing the electric with the ordinary rope driven crane, they must remember that the hoisting gear of the rope crane was generally driven by means of a single-threaded worm; this simplified the manipulation of the crane by avoiding the necessity for a brake, but the resulting friction was enormous. With a single threaded worm having its diameter four times the pitch, and the coefficient of friction assumed to be ·08, the power absorbed by friction between the worm and the teeth of the worm wheel alone amounted to 100 % of the power represented by the lifting of the load. With a double threaded worm this would be reduced to 50 %, with a treble thread to 33⅓ % and with a quadruple thread to 25 % approximately; and in comparing the efficiency of the electric crane, driven by means of spur gearing, with that of a rope crane with a single threaded worm that fact must be taken into account. An objection to spur gear was the noise it made at high speeds, whereas with worm gear they could have almost absolute silence in working, which in many instances was a matter of considerable importance.

Mr. Carter said no mention had been made of roller bearings as regards the travelling and traversing motions. These conduced very largely to saving of power in the driving of cranes. With roller bearings they would require only one-third the power needed with the ordinary gun-metal bearings. That meant that they could reduce a tractive force of 40lbs. to 13 or 14lbs. for the travelling and traversing motions, so that they

could correspondingly reduce the size of the motor. These were the most important motions a crane had to fulfil. Further he might suggest that they could apply roller bearings on the barrel shaft and reduce the power required in that way. As to worm gearing a good many people overlooked the proper way of designing it. The point to be aimed at was to have a worm of small diameter and coarse pitch, and if it were carefully made he thought they could easily get over 50 % efficiency—considerably more in fact.

No doubt cut gears ought to be used in cranes. They might lose a little in the strength of the teeth by losing the shell they got from the mould, but they gained a great deal by getting an even bearing all across the teeth. He did not think there was much noise from cut gears.

Mr. T. Whitehead asked the author to give in an appendix, the results, tabulated, as regards the saving in time when the work was being changed. Making a rough calculation from the figures given he estimated there was 30 % time saved with the electric crane as against the rope crane in charging work. That was a point of great interest to the general engineer.

Mr. A. P. Wood observed that Mr. Matthews had taken 1½d. per unit as the cost of electricty. In the works he was connected with—those of the Lancashire Dynamo and Motor Co., Trafford Park—they obtained the current at ¾d. per unit for both power and light. On that basis the cost of running the electric cranes would come out much lower. He would be very much surprised if the total cost of the current at Messrs. Armstrong, Whitworth's works exceeded ¾d. per unit, considering the size of the plant and the load factor. An important point as regards three motor electric cranes was that of acceleration. They could use much faster speeds than with

the rope crane or single motor crane, because the current could be put on gradually, and they could get up to full speed in a very short time. With a rope crane the clutch went on with a jerk and they could not use the same speeds. With regard to enlarging the diameters of armatures, as suggested by Mr. Rea, he considered that would be a great mistake, because the motor was stopping and starting all the time, and a greater amount of power would be required for accelerating it if a larger diameter were adopted. Motors for tram cars had, on that account, been reduced as much as possible in diameter, and the case for electric cranes was much more important. As to motors for 30 HP they would guarantee efficiency of 87 % at maximum load, 88 % at normal load, and 86 % at $\frac{3}{4}$ load. The motor for crane purposes gave really a better all round efficiency than an ordinary motor, because they could work it up to more than the normal load, and there would be practically a straight line between three-quarters and a heavy over-load.

The PRESIDENT (Mr. E. G. Constantine) remarked that although the Works with which Mr. Matthews was connected were of an exceptional character, he had given them full data, and the results would be very valuable for reference by anyone who proposed to put down new cranes, or wished to test the efficiency of cranes already in use. The paper was worthy alike of the author and of the Association, and he had pleasure in proposing a hearty vote of thanks to Mr. Matthews for his contribution.

This motion was carried with acclamation.

Mr. MATTHEWS, in responding, said that all the motors referred to were series wound, except that driving the rope crane, which, as stated, was a shunt machine. Mr. Adamson

had grasped the shadow rather than the substance, as the hourly cost of lighting, housing and rates per machine was a very small fraction of the whole, which was more than covered by the machine rates taken. It should be remembered that when idle neither power nor stores are being used, and for his benefit he would tell him something more serious. In No. 7 bay the advantage to the old rope crane was an aggregate of £58. The total cost, including the loss on the man and machine was £5. 2s. 9d., against £58. That meant in round figures, taking the old crane as their guide, that they could do ten times the amount of work cited in the table before the cost would balance that of the electric crane. He also thought 3/- per hour not enough for the rating of the machine. Taking 3/- per hour, at 53 hours per week, they got 159/- or about £8., which at 50 weeks a year amounted to £400, less £100 for the man leaves £300, which, on a 10% basis represented a £3,000 machine, whereas the machines working night and day leave a good margin for incidental charges. It was based on the number of hours actually worked, not by the time they were standing, but by actual production. If there was any unfairness in the comparison it was the old rope crane that suffered. The electric cranes had been obtained during the last two years, whereas the rope crane had been working 20 years, so that it was not in a very good condition for comparison. The travelling speed of the rope crane was quite quick enough when threading long guns up to 50 tons in weight into expensive gun boring and rifling machines.

He scarcely agreed with Mr. Mannock as to the friction being entirely due to the axles. They had trouble with lamination on the rails, particularly on the smaller wheels which indented on the rails. With bigger wheels there was less indentation, so that a little power was saved in this respect. As to motors, they should scarcely expect more than 85% efficiency, and they

would find that they oftener got 75. The No. 4 crane was no doubt somewhat to be pitied, as it was working under rather unfavourable circumstances. The main cause was, as he had stated, that the motor was somewhat small for the work.

With regard to roller bearings they had not tried them, as they were not making electric cranes, but if they were durable, and saved as much power as Mr. Carter had mentioned, no doubt they would be taken up. There was, however, the difficulty that they might have to put a brake on of some kind to pull the crane up. As to the price of electricity, he thought 1½d. was really under the commercial price as charged by most people or Corporations. Everyone could not get it so cheaply as Mr. Wood's firm, and in taking that figure he had come more nearly to something like ordinary commercial conditions.

---

8 Plates follow illustrating this Paper.

UNIV. OF MICH.

EFFICIENCIES OF

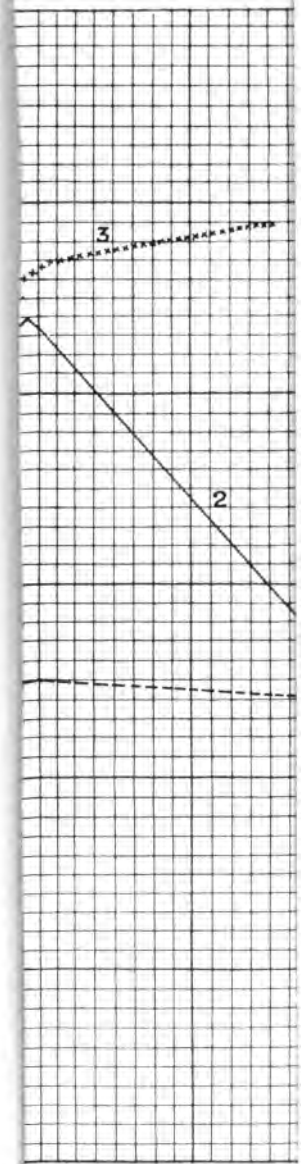

40

UNIV. OF MICH.

Diagram **F.**

OF ELECTRIC CRANES.

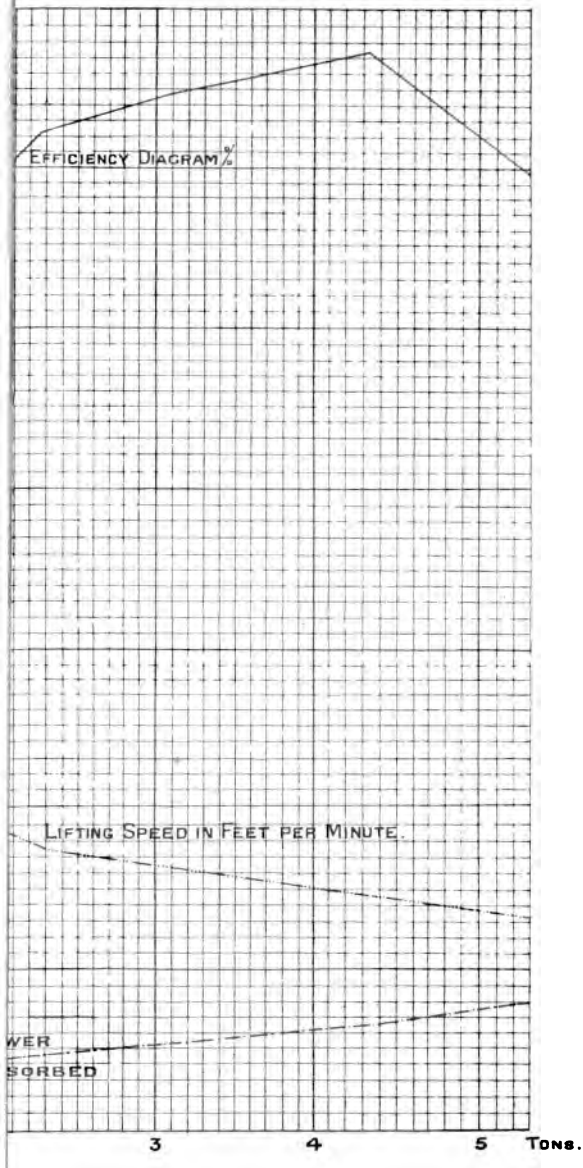

UNIV. OF MICH.

Diagram **G.**

OF ELECTRIC CRANES.

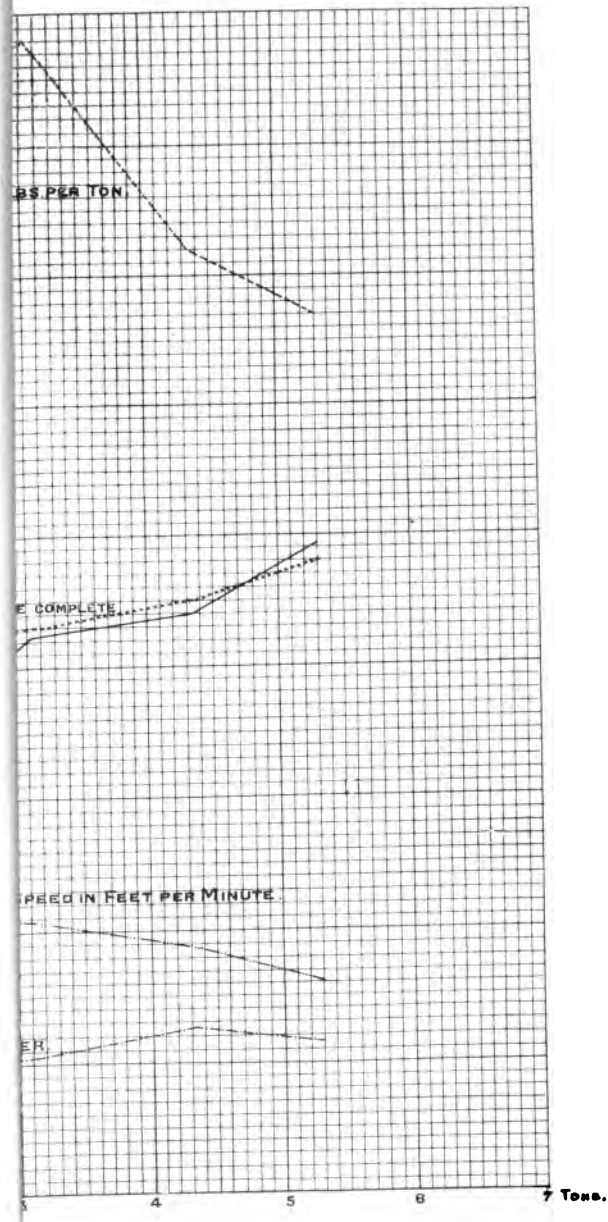

UNIV. OF MICH.

EFFICIENCII

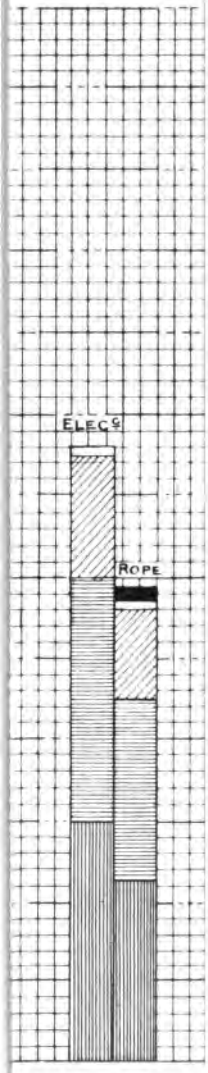

No. 3 Bay.
30 Ton Crane.

AM OF ANNUAL

UNIV. OF MICH.

SILO GRANARIES FOR MODERN FLOUR MILLS.

READ SATURDAY, 22ND MARCH, 1902,

BY

MR. J. WHITAKER,

MANCHESTER.

The flour millers of the United Kingdom are confronted with the problem of handling about five millions of tons of wheat per annum, three and a quarter millions of which is imported from abroad.*

It is a matter which greatly concerns the prosperity of the flour milling industry, whether the moving and storing of this enormous quantity of material is attended with much or little expense.

So long as our country remained essentially agricultural, producing its own food stuffs and grinding its own grain in the vicinities of its wheat fields, little could be said against the old fashioned method of carting the wheat in sacks to the nearest gristing mill to be ground as required for consumption.

We are now, however, concerned with the moving of enormous imported cargoes often of 3,000 tons and upwards. In many instances these are carried by rail, canal boat, and cart up country at great expense to the inland mills. Frequently only the most primitive appliances exist at the port for unshipping the grain. Then the grain may have to be carted from the ship to the railway or to a store, and carted a second time to the railway. When the grain arrives at its destination it is in numerous instances still received, handled and stored in a most

*Of wheaten flour about one million tons are imported annually. These figures are the averages of the four years 1897—1900 inclusive.

primitive manner, requiring much expenditure of manual labour.

The expenditure on handling and storing wheat from ship to mill is probably not on an average less than 3/- or 4/- a ton, quite apart from the haulage expenses on railways and canals. Taking these figures as being approximately correct it will thus be seen that the annual expenditure on handling wheat cannot be far short of £1,000,000.

If the English milling trade can by judicious reforms save a considerable part of this large sum it will have less reason to fear the serious and persistent competition of foreign manufactured flour.

Some twenty years ago the flour millers of this country began to substitute the old millstone by the new roller mill, re-modelling their mills on the automatic and continuous system, under which the grain moves regularly through the whole of the various processes without the intervention of a single human hand. The automatic and continuous system of roller milling is now universal in this country, and by it millers are thoroughly accustomed to the mechanical handling of grain.

The modern silo system may be regarded as a natural extension of automatic milling, without, however, being continuous. The silo granary simply begins the mechanical handling of the material a little earlier, commencing with it as received from carts, from railway trucks, from canal boats or even from ocean going vessels, according to the completeness of the system.

Our great seaports afford considerable advantages of location to large flour milling concerns, since so large a proportion of our wheat supply is imported from abroad. The ports are big centres of population and of distribution. Ports like Liverpool, Hull and Manchester are in easy communication by coastwise traffic and inland waterways with the wheat growing

districts of England. At a seaport too the miller may have the opportunity of drawing grain direct from ocean-going vessels into his own store.

The author thinks it will not be without interest to the members of this Association to have described to them the latest example of a silo granary possessing unusual advantages of situation and adapted in every way to meet the requirements of one of the largest and most modern flour mills. This is the silo granary now being built at Birkenhead, by Messrs. Henry Simon, Ltd., of Manchester, for the Mersey Docks and Harbour Board, to be used in connection with Messrs. Buchanan's flour mills.

The port of Liverpool, of which Birkenhead is a part, is by far the largest emporium of wheat in the United Kingdom, for no less than one third of our total imports of this commodity come into it.

The new silo is situated close to the north side of the Great Float which is the largest of the docks belonging to the Mersey Docks and Harbour Board. The Great Float is 50 acres in extent, and is capable of accommodating large ocean going vessels like the "Oceanic" and "Celtic."

Messrs. Buchanan's mills, which the new silo is to supply, will have a productive capacity, after certain extensions now in progress are completed, of 80 sacks of flour per hour, equal to an annual production of about 600,000 sacks, requiring annually 100,000 tons of wheat.

The silo is near the large ranges of five-storey and six-storey grain warehouses belonging to the Mersey Docks and Harbour Board.

Messrs Buchanan's Birkenhead mills are at the back of the silo, separated from it by the Dock Road, the distance between the two buildings being 100 feet.

The holding capacity of the silo is 7,300 tons of wheat, or 33,000 quarters. Its external dimensions are, length 108½ feet, width 56 feet, height to side parapet 102 feet, and height to parapet of gable 123½ feet.

The five-storey warehouse of the Docks Board nearest to the new silo appears in the illustration on Plate I. This warehouse block is separated from the silo by a space of 41 feet.

An interesting comparison showing the superiority of the storage accommodation of silos as against that of "floor" stores may be noted in respect of these two buildings, for whereas the new silo occupies less than half the ground area of the old warehouse, and is 30% less in cubic measurement, it holds 33% more grain.

Railway sidings run close to the silo both at the front and the back. It is expected, however, that most of the grain will be received from ocean-going vessels and other floating craft on the Great Float.

For this purpose an elevator tower is built upon an island pier out in the water connected by an overhead footbridge to the silo. The largest vessels like the "Oceanic" and the "Celtic" can be brought alongside this tower. At the same time the position of the tower is such that there is little interference with the access of barges to the quay, and the loading up of the company's flour on to barges and the sending away of these can go on without interruption. The size of the elevator tower is 20ft. by 20ft. in plan by 88ft. in height, measured from top of pier to apex. It is of steel covered with corrugated iron. The footbridge, also of steel, has a length of 137ft., and is raised to a height of 15ft. above the quay.

A three-storey building called the receiving house is built up to the front of the silo. This building is 40ft. by 26ft. in plan, and contains machines for rough screening and aspirating the grain and for weighing.

We will now suppose a vessel is being discharged at the rate of 100 tons an hour by the elevator and will follow the grain in its passage from the ship into the silo. The normal load is assumed to be 100 tons an hour, but the machinery is really capable of dealing with as much as 120 tons an hour.

The ship elevator contains an endless band with steel buckets attached, each when normally loaded holding about 10lbs. of wheat. The band and buckets move at a speed of 440ft. per minute. The grain after rising 60ft. in the buckets up the trunk of the elevator is shot off as the band passes over the top pulley and falls down a telescopic spout into a hopper feeding a fixed elevator inside the tower.

The grain then rises up the trunk of the fixed elevator in the tower which we will designate elevator A (see Plate II). The internal endless band and buckets of elevator A, as likewise those of the succeeding elevators, are the same as those in the ship elevator and move at the same speed.

From the head of elevator A the grain drops down a spout into a steel tank holding 7½ tons of wheat which feeds an "Avery" automatic grain weighing machine, Richardson's patent.

The amount of airing which the grain receives before being deposited in the silo is an important matter to the miller. It is well, therefore, to note that the grain falls in a very wide but thin stream from the tank into the hopper of the automatic weigher. This stream is not continuous but is interrupted for a brief interval once every minute and a quarter to allow the weigher to balance and discharge itself. The hopper of the weigher takes 3,000lbs. at a draft, and the number of drafts is recorded automatically on the dial of a counter.

Below the weigher is a tank holding six tons which receives the grain as it falls from the weigher. A spout directs the grain from this lower tank on to a wide rubber band conveyor

running at a speed of 550ft. per minute, by which it is carried along the footbridge into the receiving house.

On reaching the terminal pulley of the conveyor the band bends round the pulley leaving the grain to shoot on by its own inertia into a funnel shaped hopper, from which it is spouted into the boot of one of two elevators, which may be distinguished as elevators B and C. Either of these elevators lifts the grain, discharging it down spouts in two equal streams to two "Monitor" wheat separators and aspirators.

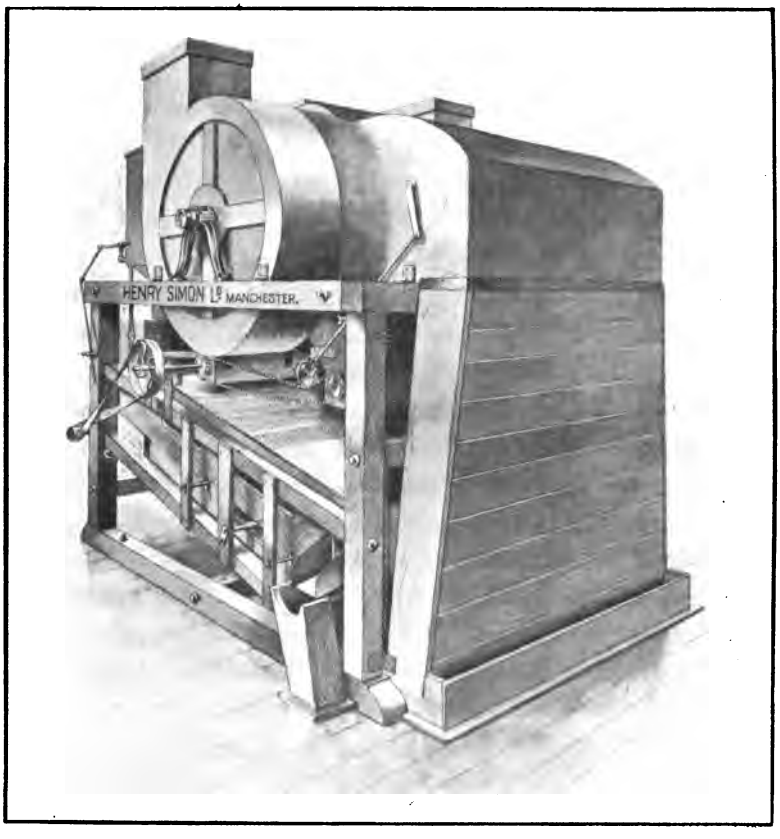

Fig. 1.

The treatment received by the grain on these machines, of which a perspective is shown in Fig. 1, and a longitudinal section in Fig. 2, is as follows. Falling from the feed hopper in a thin stream 5ft. wide upon the first shaking sieve, a powerful current of air drawn by a fan passes across it, carrying off quantities of dust and chaff. The heavier particles of chaff are at once deposited in the settling box *a* while the lighter particles and dust are drawn through the fan and forced along a trunk into a "Cyclone" dust collector, by which the air is freed from these solids and liberated in a purified state in the open.

The series of sieves, *b*, *c* and *d*, are respectively very coarse, coarse and fine, and riddle off foreign substances and impurities

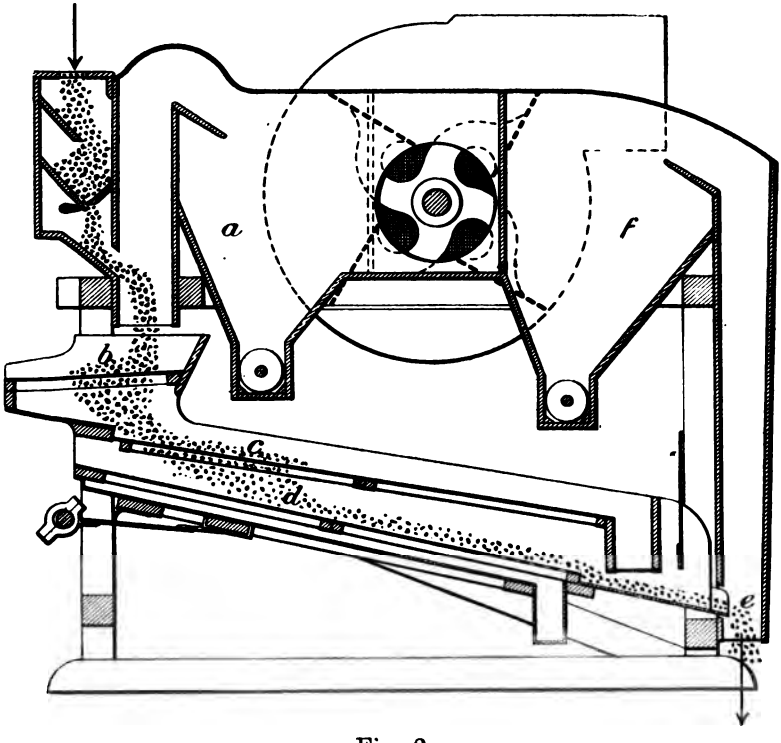

Fig. 2.

from the stream of grain, which, leaving the machine at *e*, is again met by a powerful blast of air drawing off a second quantity of dust and chaff.

This second aspiration drops heavier chaff in the receptacle *f*, and lighter chaff and dust in the "Cyclone."

The problem of grain cleaning has received very great attention during recent years. It must not be supposed that the treatment the grain receives in the "Monitor" separator is at all complete in the sense understood by a miller.

Before grain is adequately cleaned fit for grinding, it has to pass through many different separating, selecting and cleaning processes and to be washed, carefully dried and further tempered by lying for a time in appropriate blends. Every atom of foreign substance removed increases the purity of the resulting flour, or in the language of the miller "lifts up" its grade. No seeds such as oats, barley, or cockle can be allowed to remain and must consequently be removed, numerous sifters, oscillating and rotary, and indented cylinders being employed for that purpose. Then in order to detach adhering dirt the grain is scoured and, at a later period, rubbed and polished between rapidly revolving brushes. All these operations in order to be effectual are performed at a comparatively slow rate.

On dropping from the trunk *e* of the "Monitors" the streams of grain combine again and slide down spouts into either of the elevators D or E in the silo by which the grain is lifted 125ft. to the top of the silo. Here it falls on to one of the two band-conveyors on the top floor. These band-conveyors are 100ft. long; each is fitted with a travelling throw-off carriage for causing the grain to leave the band at any point on either side. Short portable spouts connect the throw-off carriages to nozzles in the floor which lead into the bins.

Besides the "Monitor" separators the receiving house contains a large independent fan for drawing air through a

series of trunks from various points in the tower, bridge and receiving house where dust is likely to arise from the moving grain.

On leaving the fan the air is blown into a "Cyclone" dust collector. Were it not for the existence of this fan the air would become so charged with dust when some kinds of wheat were being received, especially Indian, as to make the place intolerable to persons in it.

Some grain ships from distant ports, for instance San Francisco, may be months on the voyage, during which time the cargo lies in the hold with none but mere surface ventilation. The pitching about and thorough airing which the grain undergoes on being received into the silo in the way described is in any case extremely beneficial. Frequent pitching about ensures free access of air to all parts of the incoming stream of grain. The benefit accruing is of course greater the longer we can expose the grain before depositing it in the silo. The total average distance traversed by the grain in passing from the ship into Messrs. Buchanan's silo is about 800ft. The time taken by a particle to accomplish this passage is about 8 minutes, including the time taken in passing through the large grain tanks, weighing hopper and " Monitor " separators.

In speaking of airing the grain in the process of elevating and receiving it is difficult to avoid a passing reference to the system of elevating by means of air suction as in Duckham's pneumatic elevator. In Duckham's elevator the grain is drawn directly out of the ship's hold through pipes by a perfect hurricane of wind, the calculated speed of which is no less than 180 miles per hour. The interval of time during which each grain is in contact with the suction current cannot, however, be more than the briefest moment.

The estimated power required in Messrs. Buchanan's silo for working the whole of the elevating and receiving machinery at the rate of 100 tons per hour is 90 HP. This is provided by

electric motors supplied with current from a dynamo placed near the engine house of the mill. The cost of power for working the whole of the receiving machinery is not expected to exceed two-thirds of a penny per ton of grain.

It is becoming increasingly difficult to command hand labour at the docks. This difficulty is especially felt when a number of vessels arrive in port about the same time. At one port where no elevator exists it is desirable at times when clearing a cargo of 3,000 tons to get together about 70 labourers, these being all that can be conveniently massed on the available space; even with this large number of workers it takes over six days to clear the ship. Night work costs a lot of extra money and is not efficiently performed. It is sometimes worth £30 a day to the shipowners to have their vessel cleared off early. Messrs. Buchanan's elevator could easily be worked all night, the question of overtime pay not being important owing to the fewness of the hands employed, and a cargo of 3,000 tons could be cleared in 30 hours by working right through from the start.

The grain storage silo contains 98 bins, of which 48 are 8ft. square in plan, 34 are 8ft. by 4ft., and 16 are 4ft. square. Their arrangement will be seen on reference to the plan on Plate III.

The sides of the bins are 80ft. high, constructed of timber battens laid and spiked together on the crib system. This method of construction is illustrated by Fig. 3.

The battens are 4in. wide for the first 40ft. of height, and above that are 3½in. wide. They are laid just as they come from the saw without any planing. The roughness of the timber helps the grain to "hang up" on the sides and so reduces the pressure of the grain both vertically and horizontally. The minute horizontal ledge existing where one batten slightly projects beyond another serves consequently a useful purpose.

The bottoms of the bins are of plate steel in the form of inverted pyramids inclined 45° down the corners. A flanged outlet is made at the apex of each hopper to which a sort of sluice gate slide is attached worked by racks and pinions. Each slide is opened and closed by a chain passing over a chain pulley on the pinion shaft.

The hopper bottoms and timber sides are supported on a framework of rolled steel girders resting on cast iron columns placed 8ft. apart.

Each 8ft. square bin holds 108 tons of wheat. It follows that as so much weight is piled on a small area the substructural work has to be of great strength.

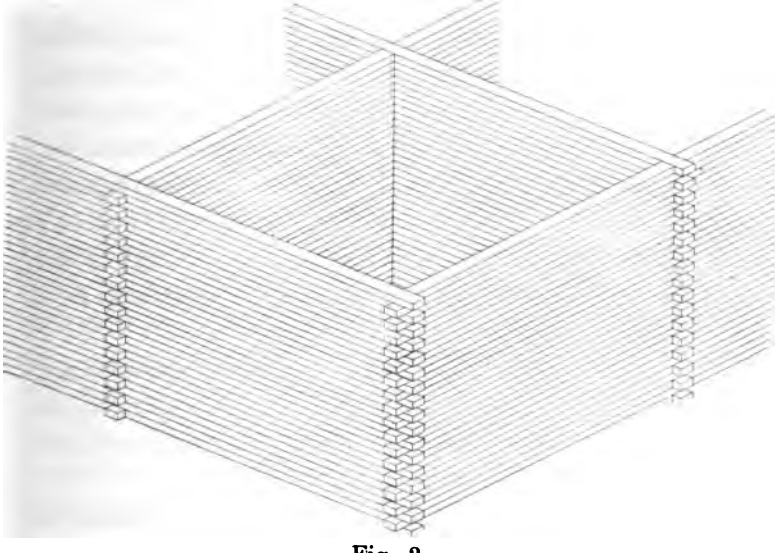

Fig. 3.

No injury results to the grain by dropping down the full height of these bins, nor in consequence of the pressure brought into play after the bins are filled.

Grain is capable of withstanding a pressure of perhaps 50 or 100 tons per square foot without injury, but in these bins the

pressure does not rise to more than a fraction of a ton on the square foot.

Were it not for the friction between the grain and the sides of the bin the whole of the weight would come upon the steel hopper bottom, none being transmitted down the sides. The pressure on the bottom would then be 4,000lbs. per square foot. If again there were no friction between the particles of grain themselves there would be a condition of fluid pressure, and the horizontal pressure would be equal to the downward pressure. As however there exists a considerable friction amongst the particles the intensity of the horizontal pressure is hardly a third of that in the vertical direction. The friction on the sides comes into play as the grain fills into the bin and begins to settle down. The resistance thus offered to the sinking of the grain is almost sufficient to support the whole of the contents of the bin, leaving comparatively little pressure upon the bottom. The pressure on the bottom of one of the 8ft. square bins is not usually greater than 700lbs. per square foot. The side pressure at the same time is about 220lbs. per square foot, and in a full bin would be about the same nearly all the way up the side, no diminution taking place until within about 20ft. from the top.

The pressure of grain per square foot is proportional to the width of the bin, thus in a 4ft. bin the bottom pressure would be about 350lbs. per square foot, and the side pressure about 110lbs. per square foot.

When grain is allowed to flow out of a bin very quickly it looses its hold, as it were, on the bin sides, with the result that a considerable increase of pressure takes place. This can be expressed in other words by saying that the co-efficient of friction when in motion is less than when at rest, and by reducing the friction we approach towards a condition of fluid pressure. In one instance where a new bin held wheat perfectly

on first being filled it burst in several places as soon as the slide was drawn at the bottom for taking the wheat away.

As far as the author has been able to observe by measuring the slight bulging of the timber walls, the pressure varies in an erratic manner even while the contents are not disturbed by any adding to or drawing off. Settling down continues very slightly for some hours after the contents are placed in a bin, and during the process of settling the grains alter their relative positions with consequent variations of pressure.

Owing to the intensity of the pressure in wide bins being greater than in small bins in the proportion of the width of the bin, there are constructural advantages in favour of small bins. Let us consider for a moment the resistance offered to a horizontal bending or bulging force on a strip of bin side say one foot high. Let b represent the breadth of the bin. Then the pressure per square foot varies as b and the total pressure on the strip varies as b^2. Therefore the bending moment on the strip produced by the pressure varies as b^3. But the resistance of the strip to bending varies only as the square of its thickness. Thus for every increase in the breadth of a bin the thickness of the bin side must be increased in a greater ratio. It follows that more material in proportion to the holding capacity must be used for the sides of big bins than for those of small ones. This is well illustrated by the examples in Fig. 4. Supposing a square area of 48ft. 4in. side to be covered with bins 8ft. square, the bin sides would require to be 4in. thick. Supposing again the same area divided into bins about 12ft. square the sides would need to be 7¼in. thick. In the latter case the sides require 28 % more material than in the former, and the capacity of the bins is 3 % less. There is also an economy of material in the hopper bottoms and girders of small bins compared with those of large ones. Because the Americans first built bins 12 or 13ft. square to allow space for

railway trucks to pass between the bottom columns, it has been imagined there was some mysterious virtue in bins of that size, and difficulty has been experienced in persuading Englishmen to use smaller bins, although railway trucks were not required below them.

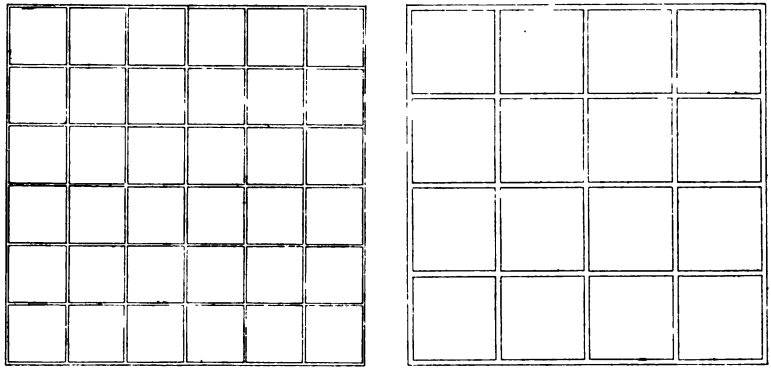

Fig. 4.

But the constructional advantages of small bins have not alone led to their adoption in this case. The sizes have been determined by their general utility. An English miller desires to store numerous varieties of wheat. It is no unusual thing for him to have 12 or even 20 different kinds of wheat requiring separate storage before being blended for use in the mill. Besides the miller suffers no inconvenience from small bins even should a large lot of his wheat be of one kind, for several small bins are just as useful for its accommodation as one large bin. There is still another and very important argument in favour of small bins. It is that whereas in big bins the grain gets sorted into heavy grain and light grain as it sinks in the bin on flowing out, in small bins this sorting does not occur to any appreciable extent. This is a matter affecting the owners of public granaries more than millers for it is extremely awkward if a grain merchant has to hand over a consignment

of grain varying greatly in character between one sack and another, and Sprague's & Henderson's patent mixing spouts have been devised to prevent this curious action taking place in the large bins common in public granaries.

The space under the hopper bottoms forms a lofty and well lighted place in which the operation of drawing-off from the hoppers can be easily and efficiently attended to. Being readily under observation there is little likelihood of dirt or rubbish, those great fire causing enemies, being allowed to accumulate. Besides there is nothing in this basement of a combustible nature. The basements of silos, especially those of the American pattern with wood bottoms, are the most vulnerable part from the point of view of fire risk, but in this case the basement is particularly safe. It may be noted that the hoppers are made much steeper than is usual in American practice to avoid the trouble of having to scrape out the last portions of the contents. Iron bars are built across one corner of each bin, one every foot of height, forming a ladder down that corner.

The timber sides of the bin structure are entirely independent of the outer brick walls of the silo, and there is a clear space between the timber bin sides and the brick walls all round, a foot or 18ins. wide, allowing very free ventilation round the outside of the bin structure.

Grain silos built in this manner with steel bottoms and timber bin sides exist in nearly every large town in England, and although over fifteen years have elapsed since the first one was put up, not one has been yet damaged by fire. The insurance offices are coming to regard them with considerable favour.

Timber as a material for the bin sides possesses many advantages. Constructionally it is light in proportion to strength, and it is cheap. As a substance to have in contact

with grain it is better than brick, cement, or iron. The latter bodies condense moisture upon their surfaces which wets and damages the grain in immediate contact. Wood does not condense moisture in this way, or if it does it absorbs it into its own pores. Timber bins are very durable, some built fifteen years ago at York still show the marks of the saw almost as fresh as when new. Care must be exercised however not to allow grain to shoot from any spout against a bin side, otherwise the action will be like that of the sand blast, and the side will be quickly worn through.

The great beauty of the silo system is that grain can be turned over from one bin into another with no labour or trouble and marvellously little expense. What are known as tender wheats must be turned over frequently. If these wheats are stored in sacks or on floors in bulk it is a costly matter to turn them over even once. Where grain is stored on old fashioned floors in bulk it has frequently to be turned by hand. This is perhaps one of the most uninviting jobs imaginable. It consists in throwing the grain, a shovel full at a time, from one pile on to another. It is performed by a labourer, who by the severest bodily exertion carried on in the dustiest of atmospheres, can turn over about thirty or thirty-five tons in a day of nine hours. Even where "floor" granaries are fitted with bands and elevators, much hand labour is required to clear or trim the grain from the floors to the spout holes, and to distribute it on to a floor again after it is elevated. While the Mersey Docks and Harbour Board find a charge of 2½d. per ton covers the cost of hand turning in their "floor" grain warehouses, they have to charge about 7d. a ton when grain is turned by band and elevator.

Messrs. Buchanan's silo has two band conveyors below the bins fed by spouts from the hoppers. As the principal object in turning over is to air the grain, this operation is usually per-

formed at as slow a rate as the business will allow. Thus the band conveyors provided for this purpose below the bins are not so large as those receiving from ship. They will however, if required, carry easily at the rate of 60 tons per hour. On leaving the end of one of these bands the grain can shoot immediately into the boot of the elevator D or E and so be lifted to the top of the silo where it is conveyed into another bin. If no grain is being received from ship it is possible to turn over two distinct lots of grain at once. In turning over it is nearly always necessary to pass the grain through a weigher and for this purpose it is spouted from the bottom band into one of the short elevators B or C in the receiving house and fed thence to an "Avery" automatic weigher of 1,500 lbs. hopper capacity from which it falls to one of the tall elevators D or E, and so on to another bin. Grain requiring extra freshening up can also be passed through the "Monitor" separators on its way from bin to bin. The cost of the power required to turn over in this way is hardly more than a farthing per ton of grain.

There is a passenger lift communicating from basement to top floor of silo, and a proper arrangement of speaking tubes. The electric light forms part of the equipment of the silo.

A certain number of bins have machines placed below them for drawing off definite proportions by cubic measure of grain to form a mixture to send to the mill. These machines, which are of the Simon patent "Exact" pattern, are a recent advance on anything previously used for this purpose, in that the measure can be adjusted to the greatest nicety and the machines do not break grains of wheat, nor choke up from the presence of large objects like nails, sticks or strings which may by the non-use of the separators, by carelessness or accident find their way into the bins. The wheat is collected from a number of these measurers each drawing off grain at a specified rate, in a worm conveyor, whence it is drawn by pneumatic suction along a pipe

under the Dock Road into the receptacle F in the wheat cleaning department of the mill.

The facilities enjoyed by this sea-port mill for the rapid and economical handling of grain are not beyond the reach of the inland mills.

An inland mill within easy reach of a wheat growing district is not necessarily at a disadvantage in meeting competition from a port mill, but may often be at an advantage. If an inland mill is fortunate enough to be situated on a waterway, grain can be carried in bulk in barges from the side of the ship right up to the mill, then elevated, automatically weighed and stored in a silo; the only difference between this case and Messrs. Buchanan's being that a portable elevator is employed on the ship, and a barge between the ship and the elevator at the mill.

There is the most pressing need in the interests of economy for the general adoption of bulk carriage both on canals and railways. The expenditure on sacks is not the chief objection, although that is on the aggregate large, but it is the expense of handling inseparable from the use of sacks.

Most of the large milling firms of this country have recognised the advantages of silos so far as to go in for more or less useful silo systems, but on account of absence of waterway or railway siding and absence of bulk trucks many of them have to be content with very incomplete systems.

The use of bulk trucks has been adopted to a slight extent on railways in Scotland, and it is said some are now being built by the Lancashire and Yorkshire Railway Co. Should a general move in favour of their use be made by grain users a much needed reform will be brought about resulting in the strengthening of the position of an important branch of trade.

DISCUSSION.

Mr. H. Congreve said he had listened with interest to the description of the silo at Birkenhead. In its main features it was practically on the lines of the one at the Manchester Docks. There was one point, however, in which it represented a very great improvement. This was in the adoption of electromotors for driving the machinery, instead of the long rope drives used in the elevator at the Docks. Mr. Whitaker had referred to the dust at the silo, but had not stated how it was intended to dispose of it. At the Ship Canal silo there had been considerable difficulty in dealing with this question. The original plan was that the dust was collected by the cyclone system, and then passed into the boiler furnaces to act as fuel. On paper that plan looked all right, but after a long trial they had come to the conclusion that dust in the furnaces was an unmitigated nuisance, and of no value as fuel whatever; it tended to kill the fire, choke the flues, and to cause explosions. The result was that Mr. Hunter had decided to take the dust out of the furnaces and deal with it in a receptacle, for which he had just prepared a design. Roughly speaking it would be a bin, 9ft. square and about 24ft. high, lined inside with smooth match-boarding, and covered on the outside with tiles. The dust would pass into this bin through pipes, and there were specially designed louvres to allow the air bringing the dust in to pass out at a very low velocity, carrying out as little dust as possible.

A considerable saving was anticipated from this arrangement, as it would lessen the cost of stoking, and the dust would probably realize about 10/- per ton. The grain elevator produced between one and two tons of dust per day, and it was expected that the bin would soon pay for itself.

Mr. Whitaker had not referred to the question of cost. He might mention that a silo on a large scale, such as the one at the Docks, excluding of course the very special foundations required there, could be constructed for about £2. 10s. per ton of wheat stored.

He would like to ask Mr. Whitaker how the pressure of 50 to 100 tons per square foot of grain was arrived at. The speed of discharge for the elevator at Birkenhead seemed small. It would not do at Manchester. He took it, however, that the elevator at Birkenhead was in connection with one mill, whereas that at Manchester was in connection with the trade of the whole district. This also affected the question of the size of the bins. One size of bin might be right for a silo for one mill, whereas a different size would be required in a silo dealing with large cargoes, which did not go to one mill only, but all over the country.

Mr. Milsom said he concurred in the views of the author with regard to the handling of grain by machinery, and the storage of it in bulk, as being the most economical way of dealing with it. The problem of handling five million tons of wheat, together with a further quantity of, say, three million tons, which would more than cover the amount of flour imported into this country, could be quite easily solved on the lines laid down. The English miller could then not only supply the home market but successfully compete with foreign millers in supplying the Continental market.

If the principal ports in the United Kingdom were provided with modern elevators or silos, with a total capacity of, say, two million tons, the thing could very easily be done. It did not need so much permanent capacity, as it did the means of rapidly handling the grain. The Manchester Ship Canal elevator

had a storage capacity of 40,000 tons, and all the grain arriving in Manchester was passed through with ease, although fully three-quarters of it was delivered in sacks, and not in bulk. If the millers in the surrounding districts would equip their mills with modern silo granaries, and insisted upon the grain being delivered to them, either by cart, barge, or rail, in bulk, there was no reason why the elevator could not handle, say, half a million tons per annum, and as the Canal Company gives a rebate of 1½d. per ton on grain taken away in bulk, this, with the saving in sacks, and in time, would soon repay the millers for their outlay.

Mr. Whitaker stated that the expenditure on handling and storing the wheat from ship to the mill adjacent to the elevator was 3/- to 4/- per ton, whereas the cost in Manchester at the elevator, ex ship, was 6d.; then there was a further merchant's charge of 9d., including three days' storage and delivery, ex elevator, making 1/3 per ton. An additional 6d. per ton, railway haulage charge, for mills within reach of the Manchester Ship Canal Railway—as to Baxendell's mill in Trafford Park—would bring it up to 1/9. The elevator was equipped with a separator, having a fan and cyclone, similar to the one described in the paper. He rather differed from the author respecting Duckham's pneumatic elevator. He had found it very efficient. It did away with a lot of labour, and was very advantageous for dealing with small lots, awkwardly stowed between decks, in bunkers, &c. He thought too that each grain was more thoroughly aired than by the bucket system, and Mr. Duckham claimed it to be quite a grain drier, although they had not had occasion to use it as such.

With reference to the carriage of grain in bulk, Messrs. Baxendell were having some bulk wagons built, and it is expected the firm would be thoroughly pleased with these when they got into operation.

As to the sizes of bins, these varied according to conditions, and there was no rigid rule. The most convenient general size had usually been about 12ft. square, or 8ft. by 14ft., or something of the same proportion. At the Great Northern elevator at Buffalo, there were large steel tanks 40ft. in diameter and 80ft. high, but they had found them rather too large for practicability, and had put partitions in some of them. The size of bins all depended upon the demand. If a miller wanted a lot of small bins he was at liberty to have them. In the United States the tendency now was towards steel bins. They were constructing elevators of steel almost everywhere, especially in the West, and at Buffalo two new steel elevators are being built to replace the wooden ones recently burned down. When connected with flour mills they were adopting the pneumatic rather than the bucket system.

Mr. Huxley said that the silo at Birkenhead would probably be running about the middle of August in conjunction with the large and complete wheat cleaning, washing, drying and flour milling plant Messrs. Simon were building for the same firm at the back of the granary, and on behalf of Messrs. Simon he should like to invite any of the members who would care to visit it to do so when it had got into actual operation.

He had had the pleasure of going through the silo granary at the Manchester Docks, and found that in its main features it was identical with what were the most up-to-date silo granaries in the United States in the year 1893, when he was over there. The style of granary Mr. Whitaker had described would cost over £24,000, or about £3 per ton of grain stored, but the insurance they had to pay would be much lower than that of the Ship Canal silo. One important improvement was the arrangement for power transmission, which was very simply and effectively accomplished by electricity. In this respect it

was a great advance on that at the Ship Canal, where there was a very complex and circuitous arrangement of rope drives. The first silo granary of any importance in this country was that built by the Liverpool Grain Storage Company, which held 50,000 tons. A second silo granary was constructed by the same Company almost simultaneously with that on the Ship Canal, and was constructed entirely of brick. To give an idea of the extent to which the charges had been brought down by means of modern grain silos, he might quote the charges at Glasgow, where they were still taking grain in by the old costly methods. The charges were as follows:—master porterage, receiving the grain on the quay, weighing, watching, insurance and delivery, 1/2 per ton; carting to store 10d.; receiving from carts to store 3½d.; weighing and delivering in bags to carts 9d.; hoisting charges 2¾d.; 14 days' rent 1½d.; cartage from store to railway 10d. per ton, total 4s. 2¾d. Comparing that with the 1s. 3d. at Manchester they would see the enormous economy effected by the silo.

The President (Mr. E. G. Constantine) said they had received a collective invitation to inspect the silo granary and corn mill at Birkenhead when completed. He thanked Mr. Huxley for the invitation, and was very much mistaken if the Association would not be only too pleased to accept it at a convenient opportunity.

Mr. W. Fox said they had contemplated substituting electric driving for one of the longest rope drives they had got at the Ship Canal silo, but were told by insurance people that an electric motor was prohibitive in the building.

Mr. J. H. Humphreys asked what material the bin that failed was constructed of. As to insurance, if the bins were made of iron, although the first cost would be considerably more, the

saving in the fire premium would pay at any rate the interest on the extra capital cost.

Mr. ALFRED SAXON observed that the paper had brought before them the very great value of mechanical appliances in dealing with large quantities of material, and he was sure that anything which would enable them to handle the grain supply in a cheaper and more effective manner, as they were able to do by means of silos such as that described, was of great importance to this country.

Mr. C. J. SEAMAN said he would be inclined to suggest to those who had to make a building of the kind described that they should consider whether steel might not be used for the framework, and a hexagon shape adopted for the cells. He thought they would thereby get strength and great storage capacity. If the contact with metal was injurious to the grain, they could overcome that by insulating it with some cheap and easily obtainable material. He believed there were many great advantages in the way of electrical motive power, and the motor might be entirely enclosed and so arranged as to be practically separate and apart from where the dust was floating.

Mr. C. FLETCHER referred to the aspect of the grain storage question as it affected the national food supply. A committee had considered the question of what means could be adopted for storing grain in large quantities in this country so as to have a supply of food in the event of European war. One method proposed was to store it in some kind of silos similar to those described, but the difficulty was the cost of the number of silos that would be necessary. The estimates varied from about five to seven and a half millions for building the silos required, and for the cost of up-keep from one to one and a quarter millions annually. He would like to ask Mr. Whitaker his opinion as to

the possibility of keeping wheat in good condition in such silos for twelve months at a time, and as to what would be the cost of the silos and of the up-keep per annum.

Mr. T. WHITEHEAD observed that bins arranged very much after the style of those in grain silos were being largely adopted for storing various kinds of ore. At Ellesmere Port, on the Ship Canal, a plan had been adopted by which ships were brought alongside a quay furnished with a Temperley transporter, which lifted the ore in buckets direct from the hold of the vessel, and discharged it into a tipping wagon standing upon an automatic weighing machine, placed a little above the tops of the bins. After weighing the wagon was run on a tramway over the chosen bin, its contents automatically discharged, and the wagon returned to the weighing machine without any manual labour whatever. The cost of removing from ship's hold to bins, including weighing, was about 5d. per ton. The tops of the bins are about 30ft. high, and the bottoms about 10ft., so that the ore can be shot into wagons on the works level line at a merely nominal cost. The whole arrangement is convenient and economical, but for other reasons, which need not be stated here, the quantity of material dealt with has not been large.

The PRESIDENT (Mr. E. G. Constantine) said those who had seen the loading and discharging of grain both by hand and by mechanical means must have wondered why mechanical systems had not been adopted to a very much larger extent than was actually the case. Taking the Black Sea or the Baltic grain ports, and comparing the length of time consumed in loading comparatively small-sized steamers, with what was done at New York, Boston or Baltimore, they could not but be struck with the difference in time and cost. The same remark applied to the discharging. The subject which had been brought before

them was a very important one. Anything which tended to cheapen our food products was a matter of national importance.

A great amount of care and mechanical ingenuity must have been exercised in the design of structures like the silos that had been referred to by Mr. Whitaker and the various speakers. There was one point in which the Birkenhead silo appeared to be a great advance on that on the Ship Canal, and that was in the method of applying power. Those of them who had visited the Manchester silo were very much struck with the complexity of the rope-driving arrangements. It certainly appeared to him that if it were possible to adopt electric motors for driving purposes in elevators, &c., and they could get the insurance people to accept a reasonable rate on the building, it would be a step in the right direction.

He would like to ask Mr. Whitaker what was the greatest angle he had found permissible in the conveyor for carrying the grain. As to the electric driving he would like to know whether the electricity was generated on the premises or was obtained from a public supply. In concluding his remarks the President proposed a vote of thanks to Mr. Whitaker for his interesting paper, which was unanimously adopted.

Mr. Hunter wrote to express his regret that circumstances rendered it impossible for him to be present at the reading of Mr. Whitaker's paper, which had special interest for him, as it would appear that the elevator described in the paper now in course of construction at Birkenhead, is to some extent an adaptation on a small scale of the elevator erected at Trafford Wharf for the grain traffic on the Manchester Ship Canal.

The marine tower, the arrangement of marine leg (*i.e.*, the leg with band and buckets operating in the hold of the ship) the secondary elevating leg in the tower, the method of the

collection of the grain in a hopper, the pulsatory action through which the grain is passed through an automatic weighing machine, from which it passes to the band conveyor in the overhead gallery, and finally the methods adopted for raising, distributing and storing the grain in the house, are all so similar in general design and detail to those in the elevator at Trafford Wharf, that the one may almost be considered to stand in the relationship to the other of child to parent, which is but saying in other words that the Birkenhead elevator is an example of the frank adoption of American methods by English engineers.

He observed, however, that one or two alterations had been introduced into the elevator which forms the subject of the paper, alterations which are in his opinion distinct improvements, viz.: the substitution of direct driving by electric motors for rope driving, and the use of steel for the bottoms of the bins instead of timber.

He is strongly of opinion that timber battens laid and spiked together in the manner described in the paper (also precisely similar to the method adopted in the elevator at the Manchester Docks) form by far and away the best materials for grain storing purposes in a country with climatic conditions such as those which exist in Great Britain, but thinks that while steel construction is as unsuitable as brick walls for the bins generally, the advantages of steel for the formation of the bin bottoms outweigh the disadvantages seeing that the area of contact between the steel and grain is so proportionately small. With regard to the electric driving he would be glad to know whether the surveyors to the Insurance Company raised any difficulties in respect of the introduction of the motors; as in cases with which he has been acquainted, very decided, though in his opinion very unreasonable, objections have been urged, even though the motors were of the enclosed type.

The absence of a general plan of the new berth for steamers at the Marine Tower of the Birkenhead elevator makes it impossible to speak with any certainty of the intentions of the engineers, but if, as it would appear from the sketches furnished by the author, it is contemplated that steamers will be placed alongside the short island upon which the Tower is erected only, and that steadying dolphins on either side are not projected, then while the anticipations of the author that "the largest vessels like the 'Oceanic' and the 'Celtic' can be brought alongside" the Tower will doubtless be fulfilled, it is much to be feared that if he hopes that such steamers, or even any steamers of much smaller dimensions can be *kept* alongside, a grievous disappointment awaits him.

Presumedly the object aimed at in thrusting the island pier so far out from the existing quay was to leave that quay open for the reception of barges, but the advantages to be gained by the ability to load sacks of flour on to two or three barges by hand (no other means seem to have been provided or considered necessary) concurrently with the discharge of grain from floating craft at the Tower, can hardly be commensurate with the serious disadvantage due to the difficulty (or in a gale of wind, the impossibility) of berthing a large steamer at the elevator—with but the length of the pier to steady the ship against—which is sure to be experienced in the working of this plant.

In connection with this it may be observed that the author has seriously underestimated the loss due to detention on a fairly large steamer; it would be much nearer £100 per day than £30 as stated by him.

Mr. Hunter desires to be allowed to say in closing these observations that he considers that the Association is indebted both to Mr. Whitaker and to Messrs. Henry Simon, Ltd. for the presentation of so practical and useful a paper, and one which

makes it so clear that in the provision of the plant described in it, the Mersey Docks and Harbour Board have taken another step in advance, and one in which, as on many previous occasions, they have followed the lead of the Company to which they already owe so much, *i.e.*, the Company which constructed and is working the Manchester Ship Canal.

Mr. WHITAKER, in responding to the discussion and vote of thanks, observed that the dust at silos was usually sold to farmers, who came for it with their own carts. The pressure that the grain would stand, which he had mentioned, was given as the result of actual experiment. With regard to the average cost of 3/- to 4/- per ton, that was based on what was paid on grain passing through the hands of granary owners in Liverpool. They received on an average about 3/- per ton and held it about six weeks. He had put a little on that for cartage from store to railway, or cartage from store to mill if the latter happened to be in Liverpool. With regard to the bin that burst, it was an old-fashioned bin, designed, he thought, by a joiner, who knew nothing about stresses and strains. With reference to insurance, the insurance people seemed to have very strange ways of looking at things. Motors in a silo granary at Hull, he might mention, were ventilated, but just boarded off from the rest of the place, and there was a communication with the open air. The belt from the motor passed through slots in the boarding.

As to the cost of the silo, even with the large amount of steel work and heavy proportion of lifting machinery, &c., the cost of the silo at Birkenhead was not more than about £3 or say £3. 10s. per ton.

With respect to national granaries, the chief objection to their introduction came from English farmers, who had been informed that if wheat was held in stock in national granaries it would

not be English, but foreign wheat, because English wheat could not be held very long. It was of a soft, damp nature, and probably would not keep longer than say twelve months in silos or granaries. It would, however, he believed, keep in its unthreshed condition in stacks in the open air for a very long period of time. He had heard of a stack of wheat being broken up a little while ago which had been in existence about forty years. Of course wheat stored in stacks was subject to the depredations of rats and vermin.

With respect to the maximum slope of the band conveyor, he might say that peas carried up a band inclined 20° would begin to roll back, but wheat would carry easily at 25°. The electric power for the Birkenhead silo was generated by the main engine of the mill, the dynamo being driven from the first shaft after the crank shaft, and provision was being made for driving that shaft by a gas engine when the main engine was stopped.

It was not intended to moor vessels alongside the elevator tower without the help of dolphins, as these formed part of the original design. A system of sack shoots already existed near the new silo at Birkenhead, for delivering mechanically flour and manufactured products to barges lying alongside the quay.

---

4 Plates follow illustrating this Paper.

GRAN

VATOR

UNIV. OF MICH.

Plate II.

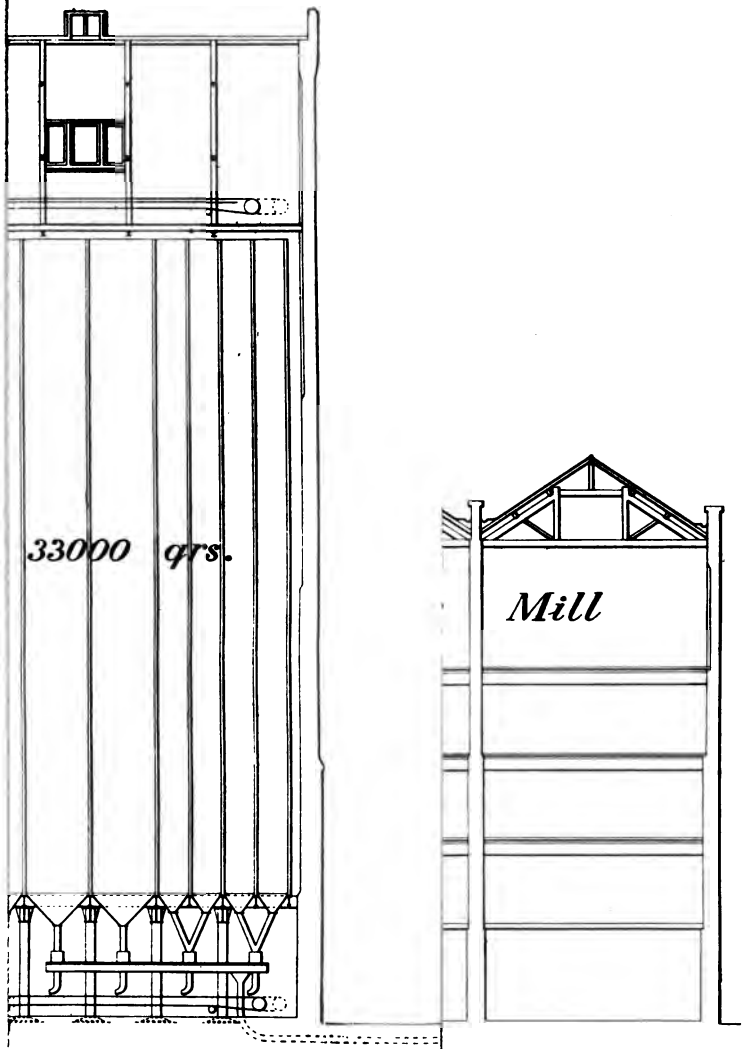

AND SHIP ELEVATOR.

UNIV. OF MICH.

Plate III.

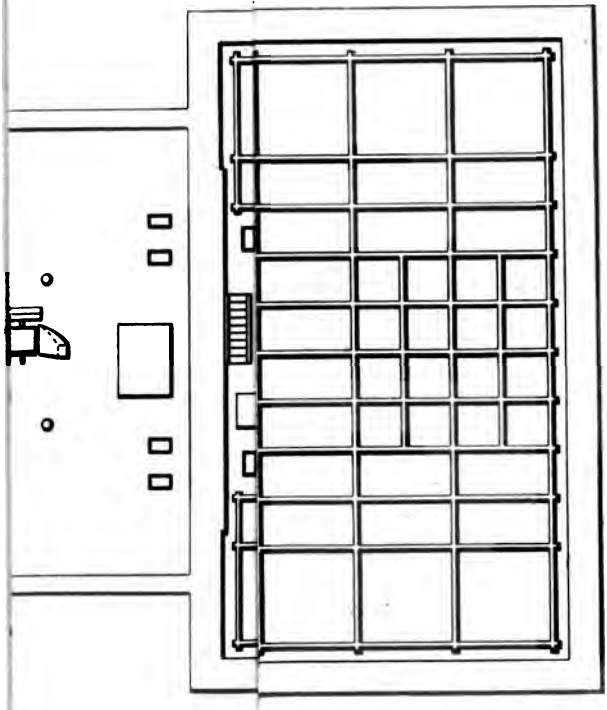

AN'S SILO GRANARY

UNIV. OF MICH.

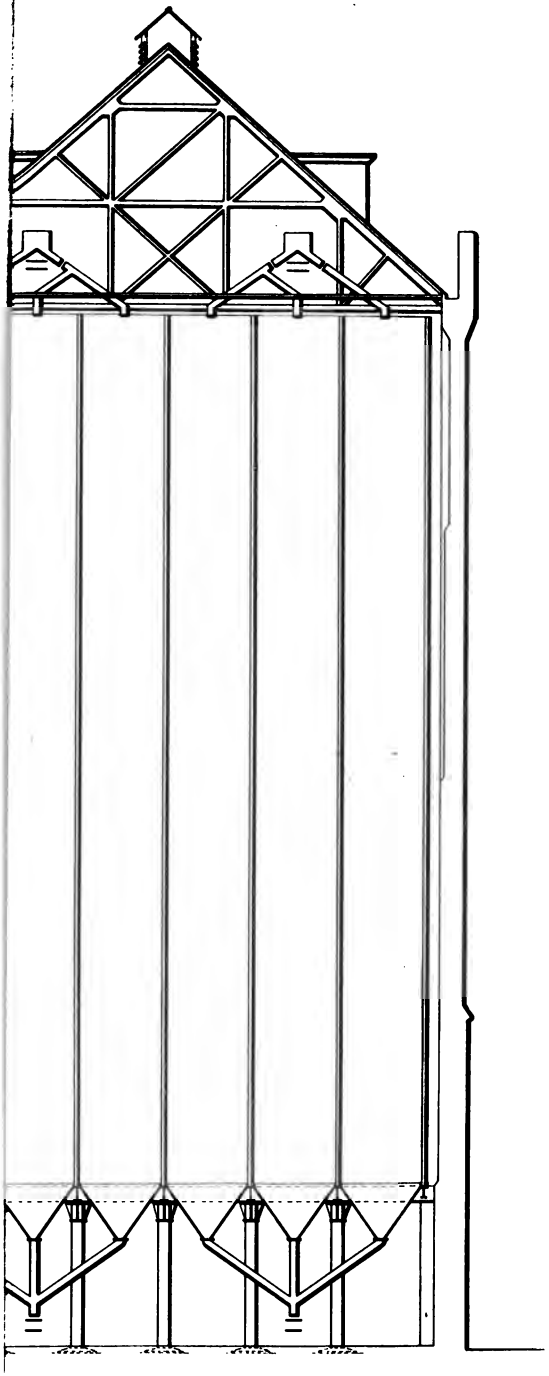

OF MESSRS. BUCHANAN'S SILO GRANARY.

UNIV. OF MICH.

THE DESIGN AND MANUFACTURE OF MILLING CUTTERS.

READ SATURDAY, 25TH OCTOBER, 1902,

BY

Mr. S. N. BRAYSHAW,

MANCHESTER.

PROGRESS OF MILLING.

It is well known that the introduction of the emery wheel for grinding milling cutters, brought the process of milling at once into the front rank of machine operations. Crude forms of circular cutters which had given more or less dissatisfaction for generations, have acquired an interest from their position as forerunners of the modern tools which have worked such a revolution during the past 15 or 20 years.

So much attention has now been given to the milling process, that in many cases a degree of perfection has been attained which apparently leaves little room for improvement. It is still true however that even in up-to-date shops the output is below what it might be. Some firms undoubtedly have developed milling far beyond the rest of the country, but as a whole, there is no reason why milling should not continue to advance during the present decade, as much as it did in the past. It should advance not only in becoming more general and more widely applied, but also in the direction of giving better results.

STANDARD STYLES AND SIZES OF CUTTERS.

It is now quite a common practice to use cutters which are not adapted to their work. The number of standard styles and sizes of cutters is already enormous, and neither the manu-

facturer nor the user can contemplate with equanimity the idea of a large increase, and yet the existing standards are inadequate for the great variety of work they have to perform. The ordinary standard cutter is intended to be used on cast, or wrought iron, steel or brass, and the recognized form has been evolved as the best compromise for varied work.

There are many special operations—where the work is flimsy—where the cutter passes through different metals at the same time, or through mica, or raw hide,—or where any curious conditions arise; and the best form of cutter can only be arrived at by experiment on that particular operation. For an individual job it matters little that a cutter is not the very best design, but with repetition work it is serious to use a tool which is not capable of giving the best results.

UNDERCUT TEETH.

A turning or planing tool for iron or steel has top rake, as well as clearance below, and milling cutters for many operations should have similar rake. On the table are shewn some cutters for milling grooves in mild steel. The teeth are undercut and the pitch is coarse. They are intended to be used in a powerful machine, at a slow speed and a heavy feed.

There are also shewn some cuttings from steel shafts. These were produced in the works of Messrs. L. Gardner & Sons Ltd., by a cutter which was 3in. diameter, $1\frac{1}{4}$in. wide, with 10 teeth undercut 10°. The speed was 28 revolutions per minute, and the feed, 1in. per minute, with $\frac{9}{16}$in. depth of cut. This gives an approximate cutting speed of 27ft. per minute, and a feed of 36 thousandths (·036) per revolution. At this rate the cutter left a beautiful finished surface. It ran easily, and kept its edge well.

It must not be assumed however, that undercut teeth are necessarily advantageous. Frequently they are the reverse.

Mr. E. G. Herbert, of Manchester, has recently made a series of tests with three cutters 6⅝ins. diameter, $\frac{9}{32}$in. thick, with 1in. hole. In each case there were 80 teeth which, in one cutter were radial, and in the other two were undercut 10° and 15° respectively. The cutters, running at 20 revolutions per minute, or a cutting speed of 42ft. per minute, were fed separately into the vertical faces of heavy blocks, first of cast iron, and then of mild steel, until the machine stopped. The feeds varied from 1·4ins. per minute to ·16in. per minute, and there was no perceptible slip of the feed belt.

The results of the tests were somewhat complicated, and the curves plotted therefrom were full of interest, but they failed to shew any decided advantage of one tooth over another. The general indication seemed to be that the advantage rested with the undercut teeth with a big feed, and the radial teeth gave better results with a fine feed.

From these experiments and from general experience, it would appear that undercut teeth may often be used with advantage under the following conditions:—The machine should be powerful, and the cutter arbor of ample size. The pitch of the teeth should be so coarse that only two or three may cut at the same time. The speed of cutting should be slow, and the feed sufficiently quick to allow each tooth to take a real cut. When these conditions cannot be fulfilled, there will probably be no advantage in departing from the usual form of tooth.

Slotting or grooving cutters, spiral cutters, and side mills are well adapted for undercut teeth. Formed cutters may be so made, but there is a difficulty with the form. Thus in Fig. 1, if the true form required is made along the cutting face A B, the cutter will leave a false form to the line A C.

The difference is, in most cases, very slight, and always may be allowed for in making the cutter, but variations in grinding the

face will alter the form. It is easy in grinding to see when the faces are radial, but it is not so simple to give a known amount of rake.

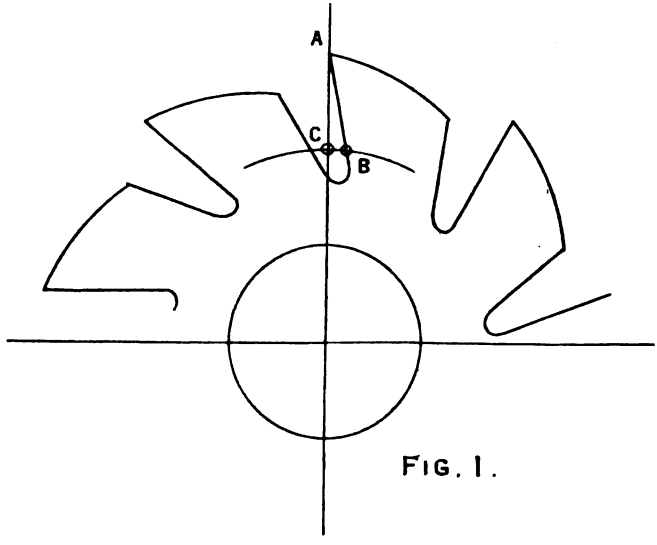

FIG. 1.

END MILLS.

The question of undercut teeth, also arises in the case of end mills. Three methods of cutting the teeth are shewn in Figs. 2, 3, and 4.

Fig. 2 shews an ordinary spiral end mill with right-hand teeth and left-hand spiral, by which arrangement the pressure from the work always tends to push the cutter into its socket. This

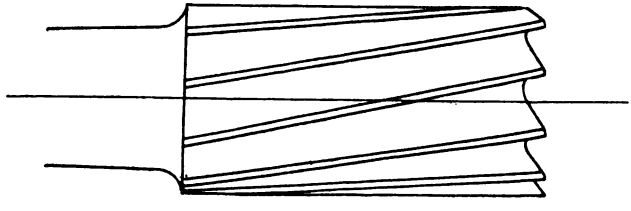

FIG. 2..

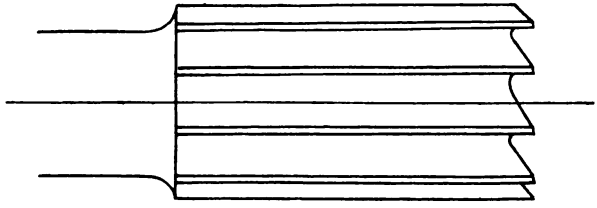

FIG 3.

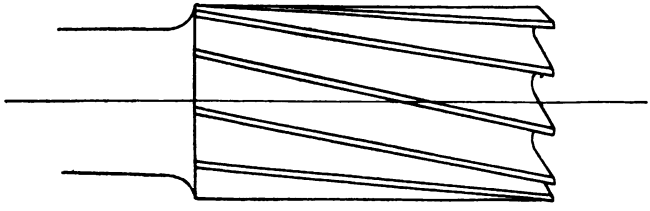

FIG. 4.

is the correct form if the cutter is to be used for milling on the sides, if, strictly speaking, it is not to be used as an end mill, for which it is unsuitable, because the teeth on the end have negative clearance and would not cut freely. For end cutting, the ordinary straight teeth shewn in Fig. 3 are more suitable, and in some cases a right-hand cutter with a right-hand spiral would be best of all, see Fig. 4. This gives correct clearance to the end teeth and, when used under favourable conditions, such a cutter has no more tendency to leave its socket than a twist drill, which is made on exactly the same principle.

SIDE CLEARANCE.

Standard cutters frequently give trouble in the matter of side clearance. It is assumed that the cutter must not lose its width on resharpening, but there must be some dishing on the sides or it would be unworkable; accordingly, a very slight clearance is given, say $\frac{1}{2}^{\circ}$ each side, which will cause the cutter to become two thousandths (·002) thinner when $\frac{1}{4}$in. has been

ground away in diameter. The cutter would be more serviceable if it had, say 1° clearance each side, but that would cause it to lose its width too soon. Now if a quantity of work is required where the width of groove is not particular to one fiftieth (·02) of an inch, or if the cutter is only used for roughing, it is worth while to take a standard cutter and grind extra clearance on it. This is particularly the case when cutting brass which is very liable to bind on the sides.

INSERTED TOOTH CUTTERS.

A development should take place in the direction of cutters with inserted teeth. All users must have been fascinated with the idea at some time or other. The obvious advantages are

1. That cheap material may be used for the body of the cutter, and the very best steel for the blades.
2. Hardening difficulties are reduced to a minimum.
3. When worn out, the blades may be replaced at a small expense.

The great objection is the first cost, particularly in the case of cutters less than about 7in. diameter. Also inserted blades are usually not very suitable for wide cuts. The superiority of the inserted tooth cutter is most unquestionable, in the case of side or straddle mills which are mainly cutting on the corners.

One widely used method of holding the blades is shewn in Fig. 5. The blade A is ground on the sides, on a magnetic chuck. The bush B is turned parallel and has a flat milled on it at an angle with the center line. This bush which fits in a recess, as shewn, is simply a wedge and is knocked in. There is a screw C to prevent it coming loose. A second screw D, the patent of Mr. W. S. Baskerville, is shewn for adjusting the blades sideways. There seems to be no reason why these cutters should not largely displace solid side mills, except in the smaller sizes.

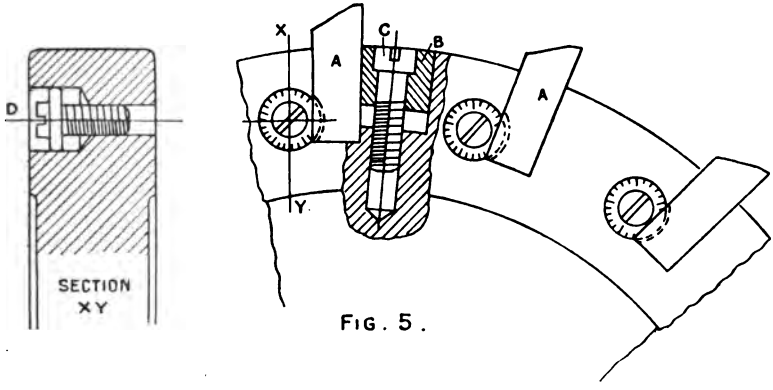

FIG. 5.

LIMITS OF INACCURACY.

Coming now to the manufacture of cutters in quantities, the great principle of "good enough" asserts itself. It must first be determined exactly what "good enough" is, and the drawing must shew that exactly. Any time spent in making a measurement nearer to a dead size than is called for, is dead loss. Fig. 6 is a shop drawing of a simple cutter which is to be measured with the micrometer, and not with limit gauges. According to this drawing, it has been determined that if the error in the thickness of a ½in. cutter does not exceed one thousandth (·001) of an inch, it is good enough. This is clearly shewn, and the grinder must adhere to the limits given, but must not waste time in making every ½in. cutter to within one half thousandth (·0005) of the nominal size.

Again, it has been found that about one hundredth (·01) is a reasonable allowance for cleaning out the turning marks on the sides after hardening. It is however, quicker to grind off a few extra thousandths than to turn them off, and the turner must keep within the limits—ten to fifteen thousandths above ½in. ($\frac{\cdot 515}{\cdot 510}$). He has no excuse for leaving too much or too little for grinding, nor yet for wasting time by taking a cut of two thousandths (·002) off the side.

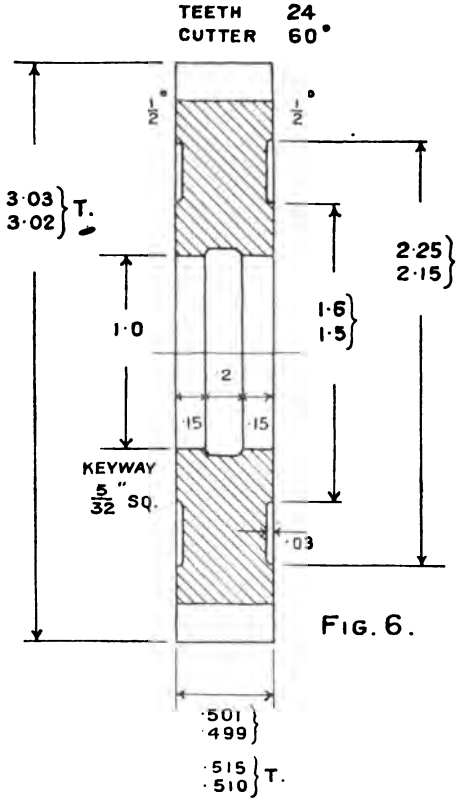

FIG. 6.

It is shewn that the actual diameter is not important, and the turner has a limit of one hundredth (·01) of an inch, which he must keep within. No grinding size is given here, which means that the grinder must just clean out the turning marks.

The drawing shews that the side recesses may vary in diameter by one tenth (·1) of an inch. The clearance each side is stated as $\frac{1}{2}°$, and it is essential that this shall run out to the extreme tips of the teeth.

Actual shop drawings of various cutters are shewn upon the table. These drawings are rubbed with phonograph cylinder wax to keep them clean.

USE AND ABUSE OF CUTTERS.

A whole paper might well be devoted to the use, abuse, and maintenance of milling cutters. A slight reference only can be made to this branch in a paper dealing mainly with their design and manufacture.

It is a source of great satisfaction to the maker, that when a cutter is broken by being run backwards on to the work, the breakage is characteristic. A cutter is shewn which has been spoilt in this way. The man who broke it was absolutely sure that it ran in the right direction, but the cracks down the faces of the teeth tell their own tale.

On many operations it is of the first importance to have a full flood of lubricant, a trickle is not sufficient.

RE-GRINDING.

It cannot be too strongly insisted that it is very wasteful to use a dull cutter. It is as hopeless to mill successfully without adequate grinding arrangements, as it would be to turn satisfactorily with only the door-step to sharpen the tools on. When a cutter is changed in time, the sharpening should only occupy a very few minutes, for most small sizes. If run too long, the grinding becomes a serious operation, which causes the grinder to lose his temper, and to draw the temper of the cutter. The writer has seen large cutters worth several pounds each, with the temper drawn blue for $\frac{1}{16}$in. down the faces of the teeth.

When the re-sharpening cannot be accomplished by two or three passes over the emery wheel, the cutter should be mounted on a mandrill and ground whilst revolving, until the worn part has all been removed; and the tooth-by-tooth grinding should be reserved for backing off to give the cutting edge. Not only is this much the quicker way, but there is no risk of drawing the temper if ordinary care be exercised.

It must always be remembered that however good a cutter is, the cutting edge may be so damaged by a little carelessness in grinding as to receive any degree of injury up to the point of being ruined. It is well to touch the cutting edge with an oilstone after grinding.

As the teeth are usually re-ground on a dry wheel, it is important that arrangements should be made for exhausting the dust produced. Dry grinding is now recognized as a dangerous occupation, causing lung diseases. The operation is not capable of imparting consumption itself, but it so irritates the throat and lungs as to keep them in an unhealthy condition, and render them susceptible to consumption. For this reason the emery wheel should be enclosed, as far as possible, in a hood, and a good exhaust provided by a fan or other suitable means.

QUALITY OF STEEL.

The all-important question of the quality of steel to be used is too often ignored. Self-evident as it is, the fact may yet be overlooked, that two cutters, one made of the best steel, and one of the worst, may be identical in appearance, and the difference will only become apparent in use.

In small or complicated cutters, in which the cost of steel is only a small proportion of the total cost, the amount saved by using cheap steel is slight, and consists chiefly in the lessened labour of machining on the softer material.

In large cutters of simple forms with little machining on them, where the cost of steel is perhaps one-third or even one-half the cost of the finished cutter, the saving effected by using a poorer quality of steel amounts to a great deal, and may reconcile the user to an inferior cutting edge. A good cutter made of good steel may be re-cut, and after the second or third hardening should not be perceptibly inferior to a new one.

HARDENING.

Important as is the quality of steel, the hardening of it is equally so. Bad steel well treated is better than good steel badly treated. The would-be hardener has no lack of literature. Articles are continually appearing on the subject, but practice alone can teach the details and refinements of this most interesting process.

The following observations are put forward as the result of experience mostly limited to gas furnaces working with Bunsen burners and without blast, and almost entirely with one class of steel, costing 86/- per cwt. in the bar, and 1/3 per lb. for forgings, and of the following composition :—

Iron about		98·	%		
Carbon	from	1·0	to	1·5	%
Manganese	,,	0·10	,,	0·40	,,
Silicon	,,	0·10	,,	0·25	,,
Sulphur	,,	0·003	,,	0·004	,,
Phosphorus	,,	0·01	,,	0·02	,,

The methods enumerated are not necessarily the best. No other claim is made than that, in the case of the writer, they have brought success.

PRECAUTIONS.

It pays to spend time on filling blind holes, sharp internal angles, etc., with clay. In many cases asbestos may be bound with wire over a weak place, or over a part which must be kept soft.

The furnaces should be in a partially darkened room from which direct sunshine is excluded.

The writer has not been able to find any advantage in using old water for quenching, though it is quite reasonable to suppose that water containing a considerable amount of air dissolved in it, may not cool the cutter quite so uniformly as

it would do if the air had been expelled, therefore boiled water is to be preferred.

After machining, tools should have a few days rest before hardening. If they must be hardened immediately, they may be annealed first, but care must be taken to prevent a tendency for the surface to become decarburized. To accomplish this, an excess of charcoal should be kept near the cutters in the furnace to maintain a reducing atmosphere.

HEATING.

It is not only necessary that the cutters should be at the right heat, and at a uniform heat, when plunged, but they must have reached that heat gradually and uniformly. If the heat be applied gradually, a cutter may be made hotter than the correct temperature, and yet not crack. If a crack appear under these circumstances, it will probably go through the body of the cutter. If a cutter after being heated too rapidly, or allowed to get much too hot, be carefully brought to the right temperature in the furnace and then plunged, the teeth *may* clink off. They are certain to do so, if it be not nearly uniform in temperature at the time of plunging. In case of a mistake in heating, a cutter should be allowed to cool out, and then heated afresh.

PLUNGING.

The manner of plunging is worth attention. A thin cutter should be in a vertical plane when it enters the water. If it were plunged horizontally, one side would be cooled before the other, and would cause the cutter to warp. A cutter with a long hole should be plunged with the hole vertical to allow the water to circulate freely. Cutters with large recesses should be plunged with the recess uppermost to allow the steam to escape. The object generally is, in the first place, to cool symmetrical parts simultaneously, and secondly, to let the water have free access to every part without delay. Thus a

long thin rimer should obviously be dipped endways, in order that all the flutes may cool simultaneously, notwithstanding the fact that the water would come into contact with every part in a shorter time if it were dipped horizontally.

Cutters need not be cooled right out in the water. They may be removed as soon as they are so far chilled that the temper colour would barely shew if they were polished immediately. Cutters of a few pounds weight may be lifted from the water as soon as the teeth are chilled. In a few moments the heat from the inside begins to re-heat the teeth, and just before the colour shews they must be plunged again for a second or two. This may be repeated three or four times, or more, according to the size of the cutters. When at last they are cool enough, they should be maintained for a few minutes at a heat sufficient to just shew colour—a pale straw—and then allowed to cool out in the air. In order to see the colour, it will be necessary to have another piece with a clean surface for comparison.

WARPING.

Change of shape in hardening may be largely prevented by previous annealing, by keeping to the very lowest temperature that will give sufficient hardness, and by the utmost uniformity of heat in every part.

LEAD BATH.

Long thin rimers may be uniformly heated in red-hot lead. It is however important, in order to prevent the lead from being cooled by the immersion of cold articles, and also to avoid injury to the articles themselves by too sudden heating, that rimers or other articles should be independently heated to a red just below the hardening temperature, and the lead bath should be reserved for the final heating. The lead must be that sold as "chemical," or "chemically pure," and when in use there should be a great abundance of small charcoal

floating on the surface to prevent the formation of dross which would cling to the teeth.

Plate 1 Fig. 7 shews an arrangement designed and used by the writer for carrying off the poisonous fumes. The lead-pot is heated by Bunsen burners. The products of combustion are taken away by a flue provided with a damper, and never come near the face of the worker. Resting on the furnace is a cylindrical hood with a discharge to the chimney. The flue is led into this discharge to "draw." An opening E F G H K M is cut in the cylindrical cover, and this may be completely closed by a door which slides between circular grooves. It is so arranged that, by sliding the door, the worker can have a large, or a small opening at will, and when he bends down close to the pot, air is being drawn from his face into the hood.

DEGREE OF HARDNESS.

Whether heated in lead or not, the teeth of a finished cutter should be as hard as a good new smooth file. They should scratch glass. On the table is a broken taper rimer. It is glass hard. Before breaking, it twisted slightly, and took a permanent set as it is now.

INJURY IN HARDENING.

It has been stated above that steel may be overheated, and yet not crack if the heat be very uniform. This point must be strongly insisted upon, and claims careful attention. It means that we must not regard breakage as a dividing point between good and bad hardening. It is the division between bad and worse. When steel is badly treated, it loses its best properties long before the treatment is so very bad as to cause actual rupture. If in a large hardening, a considerable quantity of tools are broken, it is probable that many of the remainder are as bad as they can be without actually breaking, but if none are broken, it is reasonable to assume that many are well hardened. A good hardener need not be afraid of occasionally

getting a cutter barely hard enough or just doubtful in hardness, because a heat which accomplishes this will do the steel no harm, and it may be re-hardened, meanwhile, the operator has the satisfaction of knowing that the remainder of the day's work is probably very accurate indeed.

There are then two extremes which are unquestionable. A cutter which on the one hand is not hard enough, or on the other hand is broken, evidently cannot be passed.

TEST OF HARDENING.

As steel may be between these obvious limits and yet be damaged, a finer test is demanded, for if the hardener is to hit the exact point, he must know exactly what success he has.

SAND-BLASTING.

For this purpose the following method has been adopted. After being hardened and tempered in the usual manner, the cutters are dipped in oil and then sand-blasted. If there has been any over-heating in the furnace, though not enough to do apparent harm, cracks will appear on the faces of the teeth. These cracks, which are best seen immediately after the sand-blasting, are frequently so small that they cannot be detected by ordinary means, and if the teeth are broken off the breakage will probably not follow them. A cutter on which the sand-blast reveals numerous cracks may still be quite passable, indeed it would have been considered perfect but for this test. Here is a means of trying the work of the hardener between narrower limits, and he has a warning that he is giving too much fire before a tool is spoilt.

The sand-blasted cutter also posesses another advantage of some importance in the fact that if the temper be drawn in grinding, sufficiently to cause any discolouration, the tell-tale line will shew distinctly on the face of the tooth, and cannot be removed by another pass along the wheel.

Of hardening, it may be added, that it is the most difficult, and the most interesting part of cutter making.

CONCLUSION.

Returning to the general subject, one cannot but feel that milling cutters still have great possibilities before them. Better cutters, heavier machines, sufficient grinding, and the things that they have done are but earnest of the things that they shall do.

Of the various tools shewn upon the table, several are kindly lent by Messrs. Meldrum Bros.

DISCUSSION.

The CHAIRMAN (Mr. Constantine) said that the paper they had listened to was one which dealt essentially, in a practical manner, with a subject of the greatest possible importance to engineers.

He thought it would be recognised that milling cutters played a most important part in the rapid and accurate production of engineering work , and as they had a very large percentage of members there to-night, who were very closely interested, he would ask those who had had experience in this very important subject to give them the benefit of it.

The discussion was now open.

Mr. HANS RENOLD, upon being asked by the president to speak, said that he came there more for the purpose of hearing and learning, rather than speaking upon the paper, which, coming from Mr. Brayshaw was sure to be full of practical advise, and, on the whole, he had not been disappointed.

Mr. Brayshaw had given much attention to the hardening and tempering of cutters, and what had been stated, was similar to his own experience.

He quite agreed with the author that hardening was a large and difficult subject to deal with, and one which required great attention. It was impossible to say in a few words what good hardening really was, for this must vary, and depends entirely on the form of the tool to be hardened, also from the use to which it is put to and the kind of metal it has to operate upon. Some people make far too much of a mystery of it, still there was no question that to be a good tool hardener requires a workman with good common sense, observing power as to how the tools were used and the results obtained from the various methods of heating and plunging in the cooling medium, whether such be oil, water, or diluted acid.

They had been shown a compound cutter, which to him appeared to be of a rather complicated construction. In his works there were similar cutters put to the same work, but of simpler construction. In order to fasten the blades it was their custom to use plain taper plugs, which were quickly made, and which gave all the adjustability and fixity the blades required.

The author had spoken about the oilstoning of cutters. In his opinion, cutters with the teeth oilstoned were much better than those which were used direct from the emery grinding wheel. They oilstoned all their milling cutters, also the turning tools, taps, drills, rhymers and similar cutting tools, and under no conditions would they like to go without the benefit derived from it. He might say that the white Kansas oilstone was used by some, although quite as good and more expeditious results were obtained from a composition emery rubbing stone, or from the carborundum rubbing sticks, which are both American products. He, for one, would like to see the stoning more used in engineering works, as he was sure it would pay.

As to what Mr. Brayshaw had said in regard to using a flow of oil with milling cutters he quite agreed, but wished the

author had stated more specifically the function of such stream of oil. His opinion was that a good flow of oil is recommended, not so much with the idea of keeping the cutter cool, and in a good cutting condition, but to wash away the cuttings, so that they were not taken round by the cutter, and uselessly cut up again. At their works they used great numbers of circular saws, and by reversing the direction of the cutting so that when applying a flow of oil, the cuttings are washed clean away, the most beautiful clean cuts are obtained.

As regards the cooling of rhymers, mentioned by Mr. Brayshaw, especially when they were large, they should be vigorously moved about in the water, for when plunged vertically into the water steam rises up on the side of the rhymer which prevents quick and perfect cooling if it is held stationary. He knew several places in America and Germany, where they had some special hardening or cooling machines, which threw the water from all sides against the piece that required cooling.

He was pleased to hear from the author that there was now a Manchester firm making a speciality of the manufacture of milling cutters. He had often felt it would be a great deal cheaper, to smaller engineering works, to buy and use standard cutters, rather than make them themselves. Unfortunately, the mistaken idea is still too prevalent, that anything made at home was cheaper than the bought articles. Mr. Brayshaw had told them of some classification of several types of cutters, but he thought the method adopted by his firm was preferable, which Mr. Brayshaw was well acquainted with.

Mr. H. Liebert said, that in reference to the lead bath for hardening cutters, a good mechanical stirring arrangement ought to be provided so that the temperature of the lead bath is kept equal in all parts of the bath, *i.e.*, the lead bath must not be hot at the bottom and cold on the top.

He did not agree with Mr. Hans Renold that the articles to be hardened should be moved about in the liquid, as this was apt to bend them, but that it was better to move the liquid in place of the article being hardened. A good device of this class, which he had seen at work, was a sieve worked by a couple of eccentrics which lift and lower it in the water, the articles then to be hardened could be put on the sieve, which, constantly moving up and down brought fresh liquid constantly in contact with them.

He had seen a good device in Germany, where the hardening was accomplished in an open smith's hearth, charcoal being used for heating the articles to be hardened. There was no blast applied to the smith's hearth, but air was fanned on to the charcoal by means of a fan made of feathers, the heat being by this means very nicely regulated.

The cutters were then taken out and slacked in brine water in the ordinary way. By heating the cutters in charcoal, of course, the object was to avoid getting any impurities into the articles to be hardened, such as phosphorous, sulphur, &c., which in some measure are, no doubt, contained in coke or breezes. This method also enabled the hardener to watch the heat more closely than is possible in a stove.

As regards the discussion on high-speed steel, he stated that their difficulty had been, whilst being compelled to get a very high temperature on the cutters, in order to get the cutter hard when cooled, the cutting edges were damaged, and these cutters when put to work were only suitable for roughing-out purposes, as they did not produce smooth highly finished surfaces. They, however, got over this difficulty by not making the cutters white hot, but only a bright red, and putting them down on a piece of cold iron to cool which of course cooled them more rapidly than if simply hung up in the air. By this means a good cutting edge was assured, with the result that the

cutters did good and smooth work and lasted twice as long as an ordinary milling cutter. On their screw milling machines, they could only mill 50 lineal feet with an ordinary milling cutter before sharpening, whereas they were able to mill 100ft. with the high-speed steel cutters above mentioned. These cutters were 2¼in. diameter by ⅛in. thick, and were running about 100ft. per minute, with a feed of 2½in. per minute.

Mr. T. Shawcross remarked that the paper read by Mr. Brayshaw required the attention of engineers, not only as regards machinery and general treatment of milling cutters, but to a more important issue, viz., quality of steel.

On Page 127, the analysis given was that of ordinary carbon steel, the use of which was now rapidly disappearing, in fact, becoming obsolete.

Messrs. Armstrong, Whitworth and Co., with whom he was connected, had, after a most costly series of experiments, introduced special alloys in their separate or compound state, so that the correct percentage of each should give the best possible results in every class of tool steel.

The following results had been attained with a special milling-cutter steel, manufactured at the Openshaw Works. The very simple process of hardening reduced the possibility of cracking to a minimum; also no tempering was required.

A 4in. by 1¼in. cutter was selected for the following tests:—

Cutting Whitworth Compressed Steel—32% Carbon.

Revolutions	..184 per minute.
Traverse	..1¼in. ,,
Depth of cut..	⅞in. by full width of cutter.

The cutting edge remained good.

CUTTING MEDIUM CAST-IRON.

Revolutions	..184 per minute.
Traverse	..4in. ,,
Depth of cut..	..$\frac{5}{8}$in. by $\frac{5}{8}$in.

Speed then reduced, with increased traverse, to

Revolutions	..130 per minute.
Traverse	..8in. ,,
Depth of cut..	..$\frac{1}{4}$in. to $\frac{7}{8}$in. (to test corner of cutter).

The same cutter was used for the whole of the above operations. The full limit of driving power had now been reached.

A cutter of similar analysis to that given on Page 127 would not enter, and had its cutting edge completely burnt off.

It was stated on Page 130 that they should scratch glass: he, Mr. Shawcross, did not think that to be the best method of testing the hardness, in fact, it was not the hardest cutting edge that lasted the longest. Could Mr. Brayshaw give the approximate life of the lead pot, also as to whether they were cast-iron, wrought-iron, or cast-steel?

Their thanks were due to Mr. Brayshaw for his excellent paper, but which would have been doubly interesting had he given some details of the cutters made from the special steels now forcing themselves to the front.

Mr. W. A. TRITTON observed that Mr. Brayshaw had made no mention of case-hardened mild steel milling cutters. Several firms in Scotland were using these for heavy cuts on engine work, and had given up the use of high carbon steels for such purposes, though such material was used where high-class finish and accuracy were necessary.

If mild steel cutters were found practicable, the use of inserted tooth cutters would probably die out.

Nevertheless, whatever class of steel he used, the hardening shop would have to be run on more scientific lines than formerly.

He thought that each cutter or tool should bear a distinguishing mark to show the brand and class of steel that it was made of.

Speaking generally, a milling cutter was treated fairly correctly on the first occasion of hardening, as the tool maker and hardener would have the steel maker's instructions; but when the cutter had been re-cut, it will probably be hardened in the average way, which, now-a-days, when most brands and grades of steel require individual treatment, will mean lower efficiency or, possibly, breakage.

In a works or factory that could find work for say three or four lead baths and muffles, it will certainly pay to put a young man who has been trained at a Technical School along with the hardener, and let him take notes of the cutters, temperature of the lead baths, oil baths, &c., and method of operation in each case. In a few months a record will have been obtained that should be most valuable, and he would point out that it does not take many cracked or slightly soft cutters to overbalance the wages of such an assistant in the hardening shop.

Mr. W. Turner said that as regards the standard types of milling cutters, each job had its own specially designed cutter, or nest of cutters, which was considered the standard until they arrived at a better.

With reference to under-cut teeth, he remarked that they had tried these many times, but did not find them better than a properly designed radial tooth.

Speaking on the subject of inserted teeth, he noticed that these cutters were very satisfactory on suitable jobs, and a great saving of time, of which he gave the following tests:—

Solid cutter 25ft. per minute, feed ⅜in per minute.
Inserted teeth 50ft. per minute, feed 1in. to 1½in. per minute.
Solid cutter wanted re-cutting in 4 months.
Inserted cutter wanted re-blading in 12 months.

He said that they were able to use mild steel cutters with success, as far as they had gone on plain jobs not requiring great accuracy. One now working, which was made 12 months ago, had removed about 60 cwt. of stock. He thought there was no saving in the cutting speed, but only in the steel, and gave the following examples :—

SPEEDS AND FEEDS subject to alteration at any time :—

	Periphery Speed per Minute.	Feed per Minute.	Depth of Cut.	Width of Cut.
Cast-iron	30 to 60	$\frac{3}{8}$in. to 2in.	$\frac{1}{8}$in. to $\frac{1}{2}$in.	$\frac{3}{4}$in. to 6in.
Gun-metal	70 ,, 180	$\frac{3}{4}$in. ,, 6in.	$\frac{1}{8}$in. ,, $\frac{7}{8}$in.	1in. ,, 7in.
Mild Steel	18 ,, 40	$\frac{5}{16}$in. ,, $1\frac{1}{2}$in.	$\frac{3}{16}$in. ,, $\frac{3}{4}$in.	$\frac{3}{8}$in. ,, 18in.
Cast Steel	18 ,, 30	$\frac{3}{16}$in. ,, $\frac{3}{4}$in.	$\frac{1}{8}$in. ,, $\frac{1}{2}$in.	$\frac{1}{8}$in. ,, 2in.

Mr. A. SAXON remarked that for repetition work milling was unrivalled ; but somehow engineers had not been able to avail themselves of milling as they would like to do for general work.

There seemed to be considerable cost involved, and they appeared to be in a transition stage with regard to the quality and suitability of the steel itself for making the cutter. He thought the president might take the meeting into his confidence as to the steps the Council had taken for testing tool steel at the Technical School.

He was of opinion that much depended upon the quality of the steel used, regarding the quick production of work, in addition to the form of the cutters.

Mr. JAMES VOSE, referring to the new types of rapid cutting steels found, in some cases, on cast-iron, that a chilled cast-iron tool gave better results than these steels. His impression was that the new steels when put to work acquired a slight dullness, which did not increase for some considerable time. This property, though rendering the tool very satisfactory for rough

and medium classes of finish, was scarcely desirable for other classes of work. Excepting a number specially designed in conjunction with Mr. Brayshaw, he had seen no cutters on the market particularly adapted for milling brass, and thought, in shops dealing with brass work, there was room for consideration of the subject of the best form of cutter for that purpose. In his experience, the conditions called for the cutter having negative rather than positive cutting rake, and a clearance which would be excessive if applied when cutting iron or steel. The width of the cutting edge should only slightly exceed the pitch of traverse of the work, if a smooth finish, free from vibration marks was desired. This type of cutter was is in the form of an end mill.

Mr. LANDSTEIN said that one objection to undercutting the teeth of milling cutters was, that in the majority of cases, they were already far weaker than planing and turning tools, owing to much material being necessarily removed from the back of teeth. He pointed out that expansible cutters were not referred to in the paper, yet they were substantial and very serviceable tools, entirely overcoming the difficulty regarding side-clearance when milling slots. They could be packed out with paper, enabling adjustments as fine as ·002in. to be made. Regarding the composition of steel, he thought that for milling cutters it should only contain about 1·0 % carbon. The discussion had revealed conflicting opinions regarding the quality of steel from which milling cutters should be made. Mr. Renold advocated the use of the very best tool steel, with teeth brought up to a perfect cutting-edge by use of emery rubbing sticks, whilst Mr. Turner advised the use of mild steel, case-hardened. He maintained that mild steel was not capable of retaining a proper cutting edge, the edge being crushed until it presents a surface of sufficient area to withstand the stresses with which it has to

contend. After this had occurred, a state of equilibrium obtained, and the cutter continued to work without attention for a considerable time. It must be borne in mind, however, that there was no proper cutting-edge, and that mild steel cutters merely mill by sheer force, a great deal of power was wasted, and the work was done in a very rough manner.

Oil did not cool a piece of steel so quickly as water, thus the steel-hardener had the choice of two cooling mediums. Oil did not search the cavities as readily as water, and when recesses must be hardened, whilst other circumstances necessitate the use of oil, he thought it advisable to use water raised to a temperature of about 98° F., which was about equal to oil at normal temperature as regards rate of cooling. He had used a system of hardening practically identical with the Enfield system (referred to in the discussion), with every success. He thought it might be described as a quick method of hardening and tempering small cutters at one operation. The essential point in hardening was to secure the correct heat, which was roughly a medium orange colour, and, after hardening, the fracture of a piece of steel should show a granular section so fine as to be hardly perceptible. Bad results could be obtained by too low, as well as too high a temperature, though the latter was the chief offender, and he thought it advisable for the operator to harden test-pieces now and again, so that he could make sure that he was heating to correct temperature. The variation in the general lighting of the hardening shop caused grave errors in judging the temperature of steel.

Referring to the new high-speed steels, he said that these appeared to harden at any heat above a bright orange, and he found that no matter to what temperature they were heated, the fracture always revealed a perfect section. The cutters were simply cooled in air, and it would, therefore, appear that when these steels come into general use for cutters, there will be no

further need of skilled labour for hardening. At present, however, only cutters of small dimensions had been made, and the results of work on a larger scale will be eagerly looked forward to. Unfortunately, the present price of these steels did not encourage manufacturers in this direction.

The CHAIRMAN remarked that Mr. Turner referred to the use of mild steel, and if any of the members were particularly interested in this, and would approach Mr. Turner, he would, no doubt, be disposed to give them some information.

Mr. Saxon had referred to the tool steel experiments, which were now, or about to be, carried out with the authorities of the Manchester School of Technology. They had not thought of going so far with these experiments, as to include tests of the various high-speed steels for milling cutters. The idea, as at present arranged, was to test them as turning tools.

It appeared to him that this question of manufacturing milling cutters had two sides; first, the use to which they were to be put; secondly, the class of treatment they were likely to receive in the various shops. As had already been pointed out, what appeared suitable for one purpose in engineering work, was quite different for other purposes. For instance, take the milling of mild steel cranks, these could be done by mild steel cutters, but design work would require a different quality of steel.

He had much pleasure in proposing a hearty vote of thanks to the author for his interesting paper.

Mr. HANS RENOLD said he had much pleasure in seconding the vote of thanks to Mr. Brayshaw for his paper on such an important subject as milling cutters.

With regard to hardening, he might say that in their own works nine-tenths of their hardening was done in diluted sulphuric

acid. When an extra keen cutting edge was wanted, salt water was used, and when a tough edge was wanted, then the cooling in oil, preferably fish-oil, was found the best.

The vote of thanks having been unanimously accorded, Mr. Brayshaw briefly replied to the points raised in the discussion. He said the discussion had demonstrated the impossibility of covering the whole ground. He had only attempted to deal with points of general interest, but there were innumerable details with which he might go on almost *ad infinitum*. After referring to some of these details, he continued that personally he liked the style of inserted tooth cutters referred to by Mr. Renold, but there was a demand for those he had shown, and he supposed it was because each blade could be separately adjusted or replaced without interfering with any other.

Mr. Shawcross had given some figures of high-speed milling, but although he also had done a fair amount of experimenting with some of the new high-speed steel, and had obtained even more remarkable results than those referred to, he was not prepared to give up the old steel as yet. It must also be remembered that cutters made of good carbon steel, when specially run by an expert who knew his work, are capable of much heavier work than is commonly attained. The example he had given was the ordinary every day work of a cutter, which did not require special attention, and which held its edge well at the speed and feed given, under ordinary conditions not just on a trial, which was quite another matter.

In his opinion a cutting edge which was glass hard was the best, provided it would stand up. It could be made to do so by using good steel and heating it well.

The rhymer he held in his hand had twisted before breaking, but it would scratch glass.

The interesting question of mild steel cutters had been raised. With special case hardening very good results might be obtained. After carburizing the cutter should be allowed to cool slowly in the pack and heated independently for hardening.

In conclusion he thanked the meeting for the way his paper had been received.

Plate I.

MANUFACTURE OF MILLING CUTTERS.

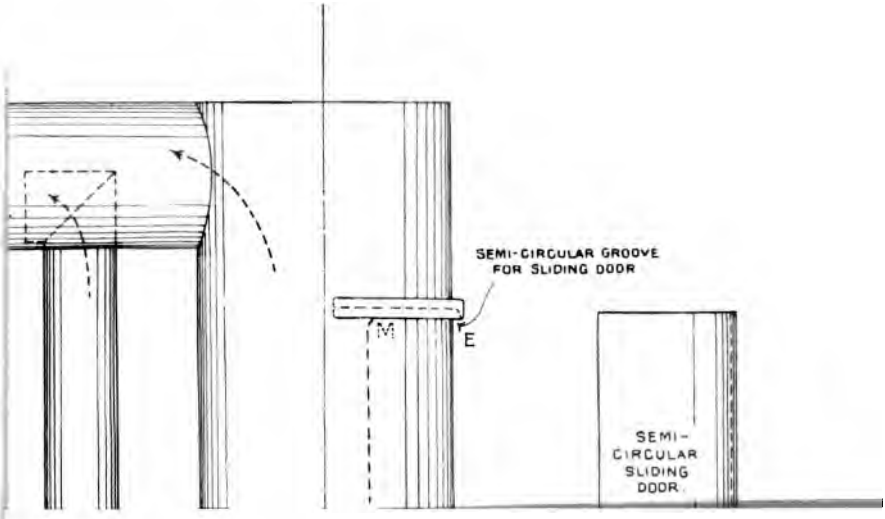

UNIV. OF MICH.

STEAM PIPES.

READ SATURDAY, 8TH NOVEMBER, 1902,

BY

MR. C. E. STROMEYER,

CHIEF ENGINEER, MANCHESTER STEAM USERS' ASSOCIATION.

MANCHESTER.

Last year I prepared a paper on steam pipe explosions due to water hammer action. It was a mathematical paper, and as my experiences in London and Glasgow had taught me that many members of Technical Societies abhor mathematics, or at least differentials, as nature is supposed to abhor a vacuum, I decided to submit the paper to our venerable scientific institution, the Manchester Literary and Philosophical Society. But in addition to being mathematical, the paper was also of practical interest, and many members of this Association availed themselves of the invitations which the Council sent out, and I believe that it may be due to their reports that I have been asked to repeat the experiments which I then made on the action of water hammers in steam pipes.

In order that the evening's experiments may be thoroughly understood, I have to explain not only how water hammers occur, but also what their powers are. Suppose that, as in Fig. 1, several steam boilers are connected by a steam pipe, the stop valves being near the boiler shells, horizontal pipes extending some distance and ending in vertical pipes which join the main steam pipe, see also Fig. 2. Suppose now that one boiler is out of use and its stop valve is shut, then both the lower horizontal pipe and the vertical pipe will get filled with condensed water. Water which has been exposed to the atmosphere contains air, which under suction rises to the surface

in the shape of bubbles, and these make the body of the water somewhat elastic. The water which has condensed in the pipes is free from air, and possesses only its own elasticity, and according to experiments, the compressibility at ordinary temperatures is almost exactly $\frac{1}{300,000}$ per 1lb. pressure per square inch.

Water enclosed in a pipe may therefore be considered to be very incompressible, and the sudden stoppage of a plug of water, even if not moving fast, must be very great. The intensity of this pressure can be estimated on the same principle that one would estimate the pressure exerted by a metal rod falling vertically on an anvil, which anvil, for the sake of simplicity, may be considered to be absolutely rigid. Assume that a rod of 5ft. long is falling with a velocity of 10ft. per second, and assume that the velocity with which sound or pressure waves travel in the rod is 5,000ft. per second, then after the lower end of the rod has come in contact with the anvil and has lost its downward velocity of 10ft., the tail end of the rod will still be moving downward with the velocity of 10ft. until the pressure wave has reached the top end.

For one instant this top end comes to rest, and under the influence of the pressure will then move upwards again. Now the time required for the pressure wave to travel a distance of 5ft. is $\frac{1}{1,000}$ second. During this short interval of time, the tail end of the rod will have moved downwards through the thousandth part of 10ft., or through $\frac{1}{100}$ of a foot, and as the bottom of the rod is stationary during this short interval of time, its length of the 5ft. has been reduced by $\frac{1}{100}$ foot, or one five hundredth of its length. Assuming that the modulus of elasticity of the rod is the same as that of water, viz. 300,000, the pressure existing throughout the length of the rod and therefore also on its under surface must be one five hundredth of this modulus or 600lbs. per square inch.

Speaking generally, we may say that the pressure per square inch produced by suddenly stopping a moving bar or a moving plug of water is found by multiplying its modulus of elasticity into the ratio which the general velocity of the object bears to the velocity of sound in the material. The velocity with which sound travels in cold water is about 4,800ft. per second. It is therefore now only necessary to estimate the velocity with which a plug of water would travel in a pipe if it is subjected to steam pressure, on the one side, and to a vacuum on the other side.

Let the sectional area of the pipe be one square inch, let the plug of water be L inches long, and let the distance of the plug of water from the stop valve or other obstacle be l inch long, then we know that the square of the velocity with which the plug reaches the closed stop valve is equal to twice the acceleration due to gravity, multiplied into the propelling pressure, and into L, the distance travelled, and divided by the weight of the plug of water, which is of course proportional to its length l. From this we can easily estimate that the velocity of the plug of water, measured in feet per second is 46 times the square root of the ratio of length of vacuum to length of plug multiplied by the square root of the pressure measured in atmospheres. If the pressure is measured in pounds per square inch, the co-efficient 46 changes to 12.

Assuming then, that we have a steam pipe in which there is a plug of water 1ft. long at a distance of 1ft. from a closed stop valve, and assuming that this space is a vacuum, while suddenly a pressure of 144lbs. per square inch is exerted on the other end of the plug, then it will be accelerated forward and will reach the stop valve with a velocity of $12 \times 12 = 144$ft. per second, and the pressure generated there will be

$$\frac{800{,}000 \times 144}{4{,}800} = 9{,}000\text{lbs. per sq. inch.}$$

If therefore, we can suddenly produce the above conditions in a short steam pipe of only 2ft. length, then with longer pipes, even under less favourable conditions, possibly higher pressures can be produced, and it is needless to say that cast-iron pipes, and stop valves, and copper pipes are incapable of resisting such a very intense pressure, even though it is very short lived. Iron pipes, and steel pipes and stop valves are more likely to offer effective resistances, and as far as I have been able to ascertain, explosions have not yet been recorded amongst them, although it can hardly be supposed that none of these pipes have ever been subjected to water hammer action.

Considerable reductions in these estimated pressures have undoubtedly to be made on account of the elasticity of the material of the steam pipes, but even then the pressures will be very intense.

As I am not sure that all the members of this Association are conversant with the accounts given of steam pipe explosions recorded in the Board of Trade reports, it is well to give a few typical cases. The exploded pipes are always arranged on the L plan, the lower leg being attached to the boiler stop valve. Generally, too, a drain-cock is fitted. If in case of an explosion the engineer escapes alive, he generally states that before opening the stop valve, he opened the drain-cock, he then heard one or two violent bangs, and if the pipes were long, these vibrated violently, and then the explosion occured. In such cases, the water level which was at first high up in the vertical leg of the L pipe is lowered by drainage until it is below the top of the horizontal pipe. The steam which at first was only in contact with the hot water level in the vertical leg, suddenly has access to a sheet of cold water several feet long, most rapid condensation takes place, and the in-rushing steam sweeps up water waves near the bend, see Fig. 2. These waves would

have travelled slowly towards the stop valve, but as they are sufficiently high and close the inlet, they cut off the in-flowing steam, the imprisoned steam condenses instantaneously, a vacuum is formed, and with the help of the steam pressure, the waves get shot forward with considerable velocity.

This action will be illustrated in the experiments.

Another way of producing pipe explosions is to have an L pipe as described above, full of water. Steam being raised in the boiler, and the pressure in the boiler being perhaps in excess of the pressure in the main pipe, the valve is likely to lift as soon as the valve wheel is turned. The first effect of the steam entering below the water would be to shoot it away from the valve, but the steam which has passed through the valve would rapidly condense and form a vacuum, with the result that the water plug would be sucked back again and would strike the valve with great force. I know of one instance in which steam from five boilers was circulating in the main pipe of a man-of-war. Steam had been raised in the sixth boiler, and when the engineer started to open its valve there was a loud report, so loud that the trial on which the steamer was proceeding was countermanded, and the boilers cooled down. On entering the sixth boiler, it was found that the brass mushroom valve had been torn off its spindle, had been pressed down on its seat, was turned inside out, and blown into the boiler against a pressure of about 180lbs. per square inch.

Yet another way to produce steam pipe explosions is to slightly vary the details given in the last case by opening the stop valve rapidly, then the boiler pressure will shoot the plug of water in the L pipe into the main steam pipe, and on reaching another stop valve, the engine, or another plug of water in some pipe pocket, or any other obstruction, it will cause an explosion at this point. It must be remembered that these plugs of water are likely to be much colder than the steam and

instantaneously produce vacuum, which then helps to propel them forward.

The glass apparatus which our chemist, Mr. Baron, has worked out for me, represents the L pipe connection to a boiler, the upper leg is connected to a flask in which water is made to boil, while the lower leg is provided with drain pipes, through which water can be drawn in or let out. The water hammers would be few, and would soon die out altogether, due to heating of the water. For prolonged experiments it has therefore been found convenient to surround the lower leg with a water jacket which has the effect of cooling the water in the lower leg, which would otherwise grow so hot as to prevent the formation of a vacuum. Precautions have had to be taken against explosions of the pipe. These consist of the use of aerated water, the occluded air soon rising to the top in the form of bubbles, which act as cushions. In addition, the drain pipes are of indiarubber. A point of interest in connection with these experiments is that these drain pipes collapse before each blow occurs, shewing that in each instance a vacuum is formed.

The conclusion to be arrived at, not only from these experiments, but from the many steam pipe explosions, is that steam pipes should be so designed that they contain no pockets in which water can lodge. The easiest way to attain this object is to let the boiler junction valve be the highest point of the steam pipe range.

If this idea cannot be carried out, then, wherever a pocket or dip occurs, one should fit either a separator or an automatic steam trap. Drain-cocks are dangerous objects; and so are cocks fitted between the steam pipes, and their traps, though on account of these traps getting out of order, an intervening cock or valve does seem desirable. Whenever this arrangement is adopted, the handle of the cock or valve should be

removable, and kept in the office, and the cock should only be closed when the trap is being repaired.

Of late, many steam pipe arrangements have had to be criticised by me, and the need for the warnings contained in this paper will at once be evident when I mention that probably 80 per cent. of all stationary boilers are provided with steam pipes which, if the ordinary conditions of handling the stop valve are only slightly departed from, may readily bring about water hammer blows, and even explosions.

DISCUSSION.

The PRESIDENT (Mr. E. G. Constantine) said that the interesting experiment they had just seen, was what Mr. Stromeyer purposed shewing them that evening. He was rather sorry that the Author had not given them a few more experiments, as he had done on a previous occasion, when he read a very valuable paper before the members of the Manchester Literary and Philosophical Society, and which meeting he had had the pleasure of attending.

From the experiments shewn by Mr. Stromeyer they had seen very clearly what would take place when water hammer action was present and also the terrific power generated by the same.

He did not know whether they would be able to criticise Mr. Stromeyer's Paper, but some of them had seen cases where there had been these explosions, and it would greatly enhance the value of the paper, and perhaps tell Mr. Stromeyer something he had not heard of before, if they would give their experiences.

He would, therefore, thank them to proceed with the discussion.

Mr. Alfred Saxon remarked that he was sure they had all listened with very great pleasure to the paper presented to them that evening by Mr. Stromeyer, and he thought that they should be very thankful to him for the great amount of trouble which he must have taken with it.

He might add that he also had the pleasure of hearing Mr. Stromeyer give the lecture referred to by the Chairman, and although the Author had given one or two additional experiments on that occasion, yet he thought that Mr. Stromeyer had somewhat perfected his apparatus since then, and the experiment beautifully illustrated water hammer action.

He said he would like to point out that the illustrations shewn on Plates I. and II. regarding the arrangement of steampipes were not typical of recent practice, as the method now adopted was to elevate the junction valves. Of course, he admitted, that the design was very attractive, and if he had only used this arrangement to explain the paper better, then, he had nothing to say to it.

He observed that Mr. Stromeyer advocated the placing of the junction valve above the level of the cyclinders in the engine house, and he would like to understand clearly what his reasons were for that. If he simply meant that the junction valves should be placed on a level with the cylinders, and so allowing of a drainage, he would then be able to agree with his suggestion.

Mr. Sam Boswell observed that he was very pleased to have seen the experiment shewing the explosions due to water hammer action, and as no doubt most of them had had the idea that the action was something similar to what had been shown, yet they were not quiet certain about it before, owing to their inability to see through a cast-iron pipe, but after the experiment that night, there could be no further doubt about it.

He noticed that mention had been made regarding the use of steam pipes for high pressure, and in his opinion, wrought welded steel (with straps over welds) was the best material for this purpose, on account of its great elasticity.

As regards junction valves, he thought these should be placed at a higher point than the engines, as had already been suggested, and might add that as the handling of these valves was a delicate matter at all times, the engineer could not be too careful with them.

Speaking of steam-traps, his idea was that the good ones had yet to be introduced, and although some were a good deal better than others, yet they could not be absolutely depended upon, and in his opinion, the best and safest way out of the difficulty was to have a constantly open drain pipe.

Mr. Joseph Butterworth remarked that before discussing the paper, he would like with the others to thank Mr. Stromeyer for his extremely lucid explanations of the cause and effect of "water hammer," and he thought it a great pleasure to listen to a gentleman of Mr. Stromeyer's ability and experience, and hoped that before long the author would favour them with another paper on some engineering topic which would be as interesting.

Turning to the paper as far as he could check the figures, he considered Mr. Stromeyer was quite correct as regards the pressure obtained due to water hammer action.

He thought that what had been said about the junction valve being placed at the highest point was not really of very great importance so long as the boiler was lower than the engine.

He would like to know which was the best sort of steam-pipe joint to use, and why they could not have some new form of joint which could not be blown out. He said that at present they had to keep a good many sizes of packing

in stock and if one standard form of joint only was used, then they would require to stock only one kind of packing.

Then again, as regards the flanges of steampipes he did not see why they should not have some standard sizes of these. He also thought that the cleaning of pipes was of importance, as about nine-tenths of the trouble was due to dirty pipes, and would, therefore, suggest that there should be some recognized method of cleaning them, such as sandblasting, or something better even than that.

Mr. T. Walton asked for an explanation of a case where some brackets had been broken as he was unaware definitely how it had occurred.

It was a new engine of 1,400HP which had lately been erected, and after they had been working satisfactorily about nine months, one of the men drew his attention to the jumping of the steam pipe. He might say that the steam piping was about 50 feet from the boiler to the engines, and brackets supported the pipes which were of cast-iron. Particular attention had been paid to the engine and boilers, and on going to examine the steam pipe referred to, he found that about seven of the brackets had been broken. He would be glad if someone could explain the reason of this, as possibly it might be due to water hammer action or something else.

Mr. W. Ingham observed that Mr. Stromeyer had referred to the Board of Trade Reports, and anyone who read those Reports regularly must have been struck by the great number of accidents which had happened through "water hammer action." He had known several cases in his own experience where the water had been violently driven through the side of a junction valve, and a clean circular hole perforated in the valve box the bore of the steam pipe. The

difficulty in these cases was to know exactly what was the best thing to do, as many fatal accidents had occurred immediately after the drain cocks had been opened to drain away the water of condensation which had accumulated in the steam pipes; the very act of opening the cocks thus bringing about the very catastrophe they were trying to obviate.

Of course, the safest thing to do was so to arrange the pipes and drains that water and condensation could not possibly accumulate, such as by leading the drain pipe from the lowest part of the steam pipes from one boiler into the steam space of the adjoining boiler when two or more boilers were working in connection. In this way as fast as any water of condensation formed it would pass at once into the adjacent boiler and no accumulation could occur. More precise and definite instructions should be given to boiler attendants, and especially should it be impressed upon them that drain cocks should never be opened without first shutting off the steam pressure from the pipes.

Mr. W. H. Cook said that in regard to the cleaning of pipes, which had been previously mentioned, the best way was to submerge the pipes in a bath of sulphuric acid; they had tried sandblasting, but it did not produce the same effect as the former had done.

Mr. J. S. Herriot thought that in looking at the paper the consideration of the temperature of the material employed had not been taken into account at all, and would, therefore, like to hear what Mr. Stromeyer had to say on this point, as he thought this was rather important.

Mr. M. Longbridge was of opinion that the great importance of the paper had hardly been understood by some of the members who had criticised it.

He remarked that the explanations of water hammer action had been exceedingly well given, and if the pupils of the Manchester Technical School received their instruction in the same manner as the Author had written the above, the school would not have been built in vain.

He noticed that Mr. Stromeyer had stated in his paper that as far as he (the Author) had been able to ascertain no explosions were recorded where iron pipes, steel pipes and stop valves had been used, but, unfortunately, he had come across a case. This case was suitably illustrated by a drawing on the blackboard, and gave what he thought was the probable explanation of the explosion.

Mr. J. Mitton suggested that a huge receiver should be placed between the boiler and the engine to counteract the effect of priming with largely variable loads.

He observed that in the case described by Mr. Longridge if the material used had possessed more elasticity than cast-iron could do it probably would not have exploded.

Mr. A. Hobbs observed that Mr. Saxon had mentioned that the steam range shewn by Mr. Stromeyer on the diagram was not of recent practice. He was sorry to say that he had seen one erected lately in a new electrical power station.

He thought that nine-tenths of the trouble with new steam-pipes and new steam-traps could be overcome by fitting all steam-traps with a bye-pass, and arranging this in such a position that the attendant could easily work it. When starting up a new installation, any engineer who had any consideration for his engines and other plant, would see that all the pipe ranges were properly cleaned out, and, in addition, when the plant was first started in use, the steam-traps should be cut out, the bye-pass arrangements being used as open drains.

The suggestion made by the previous speaker of having a large receiver and separator between the boiler and the engine, was now very generally acted upon, and should be placed as near as convenient to the engine steam-valve. This steam receiver and separator was usually drained by a steam-trap, which should, in all cases, be fitted with a bye-pass, so that when starting up, the engine attendant could easily get rid of any water which may have collected in the receiver whilst the engine was standing, or water which might be brought over by the incoming steam.

The majority of steam-traps found in general use at the present time would not satisfactorily deal with any considerable quantity of water similar to that referred to above. The expansion type of steam-trap, which was apparently meeting with most general acceptance, gave a discharge more in the form of a dribble, so that it was totally inadequate for dealing with the fairly large quantity of water encountered when starting up a large steam engine, or gear of a similar nature.

Mr. John Schofield thought that steam-traps were very useful, most frequently the fault or failure was defective fixing. In his opinion, the pipe from the steam main should be one size larger than the trap inlet, and the pipe from the trap inlet to the latter should come from the same at right angles, about 2ft. from the end. Foreign matter, such as rubber, would be then carried forward by its own inertia pass the trap connection into the extended piece, and blown out by a tap fixed at the end of the 2ft. extension.

It was better practice to also fix a large sieve-plate drilled with $\frac{1}{8}$in. holes, just in front of the trap inlet. This effectively prevents material getting into the working parts.

As regards the main steam-pipe, he thought it mattered very little, with proper provision for water, whether it slanted down-

wards towards the engine or otherwise. Yet, if it did fall to the boiler when no steam was flowing to the engine, the water by its own gravity would fall back to the boiler if there was no rise in the steam main to prevent it doing so.

The CHAIRMAN said that he knew that all the members shared with him the feeling of gratitude they owed Mr. Stromeyer for the valuable paper he had read that evening, but before proposing the vote of thanks, he would like to make a few remarks.

He observed that a good deal had been said about cast-iron pipes, but he preferred in every case where the pressure was high, to have riveted mild steel, and he would also like to emphasize the point that if the pipes were made of steel, the bends should also be made of similar material. He remembered a case in Yorkshire, where, in the first instance, there had been erected some thoroughly good sound steam-pipes, but a short time afterwards a slight alteration was made by replacing the bends which were made of cast-iron, and these had proved to be bad castings with the result that an explosion occurred.

He did not share the adverse criticisms made on steam-traps by some of the members, but he quite agreed with Mr. Schofield when he stated that steam-traps were indispensable, and would turn out to be most efficient servants if they received even ordinary attention, although if not looked after they were not of much use.

He did not know whether Mr. Stromeyer had noticed the fact that a very small number of accidents occurred in steamships due to water hammer action. He admitted that the author had given one example of a marine explosion, but of the many steam pipe explosions which he had considered in the Board of Trade Reports, he had not found many

due to this cause, although there had been plenty due to defective material or to the pipes not having enough flexibility.

He thought the very interesting explosion described on the blackboard by Mr. Longridge was only to be explained in the manner that gentleman had done. One of the members had said that if the box had been made of mild steel it would only have blown the valve off, but that was not the cause of the explosion, which was the problem to be solved.

He had now pleasure in proposing a very hearty vote of thanks to Mr. Stromeyer for his valuable paper and also for the interesting experiment he had made.

He would call upon Mr. Nasmith to second the vote of thanks.

Mr. Joseph Nasmith replied that he had much pleasure in seconding the vote of thanks, accorded to Mr. Stromeyer, but as the time was limited, he would not say anything further.

The Motion was carried with acclamation.

Mr. Stromeyer, in responding, said he considered the discussion had been a highly interesting one from many points of view.

He would first of all reply to the Chairman regarding the explosions on steamers. He believed that what Mr. Constantine had said about explosions due to water hammer action on steamers being rare, but he thought that a good deal was accounted for by the fact that these steam pipes were always short, and the engineer on board ship also gets to know how to handle the dangerous parts better.

The experiment they had seen only shewed how the water hammer action came on when the pipe was horizontal, but

he believed the action could also be got when the pipe was slanting downwards.

Mr. Longridge had asked for an explanation of the superheater case. He might mention that if a bullet were fired into a bucket of water the bucket would burst, because the impact pressure of the bullet on the water is propagated to the walls of the vessel, the pressure decreasing on the square at the distance, conversely a large surface of pressure may get focussed on a point.

Therefore, in the superheater case the water and the steam came in contact thus causing the commotion which practically amounted to shots, although he could not definitely explain it at the present moment.

He had been asked the reason why the pipes of the s.s. "Campania" and s.s. "Lucania" were made of iron, this was on account of steel pipes not being much used at that time.

As regards the height of the stop valve he wished to say that the drawing was not typical of modern methods.

The Chairman remarked that they had now to record their thanks to the Technical School Authorities and to the Principal, Mr. Reynolds for the use of the excellent room, which resolution was carried unanimously.

---

2 Plates follow illustrating this Paper.

Plate I.

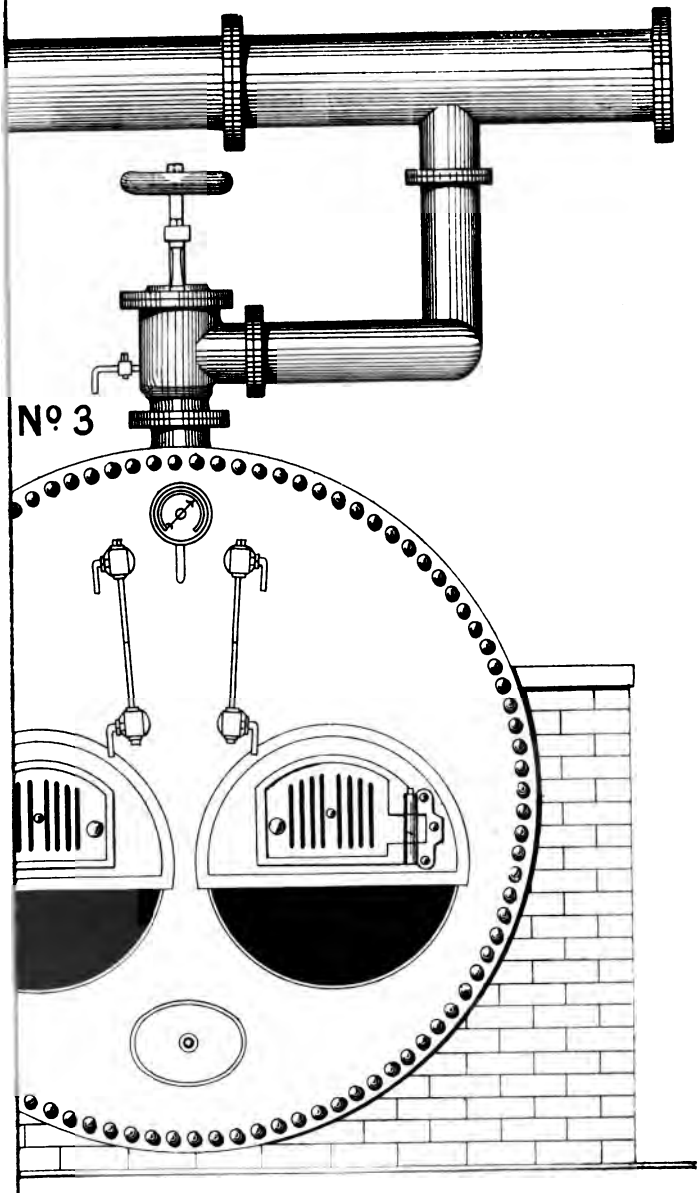

UNIV. OF MICH.

STEAM PIPES.

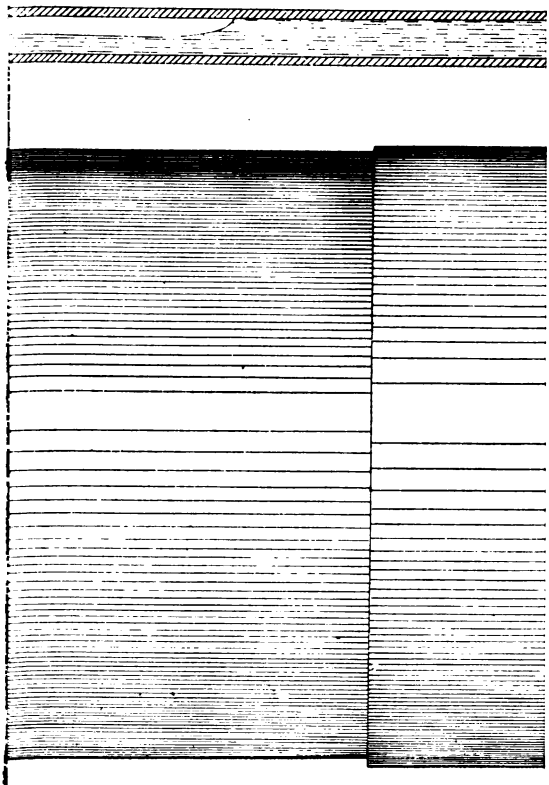

UNIV. OF MICH.

Modern Production of Boiler Draught

AND ITS INFLUENCE ON FUEL CONSUMPTION AND STEAM PRODUCTION.

READ SATURDAY, 22ND NOVEMBER, 1902,

BY

Mr. W. L. Sutcliffe,

MANCHESTER.

The modern production of boiler draught either as an aid to a chimney or for use without a chimney is divided sharply into two distinct methods, steam jets and mechanical or machine draught producers. This paper is confined to the latter system and is not intended to deal with the various forms of steam jet apparatus.

Mechanical draught production may be by air compressors, by positive rotary blowers, or by fans used either as blowers or exhausters. The two first-named are of no importance as they are seldom if ever used in modern boiler installations on account of the very small volume of air or gases handled proportionate to their size and the power absorbed, the fan being the almost universal type.

For producing draught by fans there are again two separate methods, induced and forced draught. With forced draught, the air is blown either into a closed ashpit or into a closed stokehole which is made airtight, so that the only outlet for the air is through the grate bars. A closed stokehole for forced draught is not often met with in land boiler practice, the usual plan being to discharge the air from the fan into a closed ashpit.

Induced draught is the artificial production of draught by a fan placed between the boilers and the chimney and actually handling the hot gases, pulling them from the boiler and discharging them into the open air direct or through the chimney.

Before going into detail as to these two systems of mechanical draught, it may be as well to examine the conditions under which a chimney works with natural draught. For the successful burning of coal or any other fuel under a boiler, it is essential that air be properly supplied and distributed amongst the fuel. Theoretically the amount of air required to completely burn a pound of our Lancashire coal of fair quality is 12lbs. or 150 cubic feet, but with chimney draught, to ensure good combustion and the burning as far as possible of all the combustible in the coal, it is usual to find an air supply of about double that quantity, or say 300 cubic feet. This figure applies to hand firing where the rate of combustion does not exceed 18 pounds of coal per foot of grate surface per hour.

It is obvious that if it were possible to burn the coal properly and thoroughly with only the theoretical amount of air there would be economy effected, because all the excess air supplied and the products of combustion have to pass over the boiler surfaces and the 100% excess air reduces the temperature of the gases and increases their velocity through the flues. This means that the excess air has been heated to no useful purpose, causing a direct loss. It is found that the higher the rate of combustion per square foot of grate surface, the less the excess of air required, until when burning 45 to 60lbs. per square foot, the best results are obtained with only the theoretical air supply. The lower the velocity of the gases over the heating surface, the greater will be the proportionate amount of heat imparted to the boiler and therefore the lower

the temperature of the escaping gases; here again excess of air supply causes loss by increasing the velocity of the gases.

In winter with chimney draught it takes more coal to raise a fixed amount of steam than in summer, and one cause of this is that the incoming air has to be warmed through a greater number of degrees of temperature, and the excess of air over that required for combustion shows itself in loss of economy.

A chimney produces draught by the difference in temperature, and therefore in weight, of the column of heated air inside the chimney and of a similar column of air at the surrounding temperature, as the hot air being lighter tends to rise. The greater the temperature, the larger the chimney in cross sectional area and the higher it is, the greater will be this lifting tendency, if it may be so called. This is assuming that the gases do not cool in passing up the chimney, as if a chimney were heightened indefinitely there would come a point when the draught would decrease with the increase of height owing to the cooling action taking place more rapidly. This point is very nearly reached in some of the tall chimneys in use at the present day, and any increase in their height would not cause a further increase in the draught they give.

All the heat that goes up a chimney is wasted except for producing draught and therefore the lower the temperature of the gases as they enter the chimney, consistent with getting sufficient draught to burn the coal, the more economical the boiler. Thus it is that a chimney with a very good draught due to the high temperature of the flue gases is not so economical as one where the draught is less, always providing the coal be properly burned in each case.

The theoretical efficiency of a chimney as a machine for moving air or creating draught is not one-tenth per cent., while in practice it varies from one-twentieth per cent. to

one-hundredth per cent. That is to say there is never so much as one thousandth part of the heat passing up the chimney utilised for draught production. This may be readily shewn by the following example. Suppose a chimney is 100ft. high with a cross sectional area of 10 square feet and that the gases enter the base of the chimney at 500 degrees, the outside temperature being 62 degrees. Also assume, to simplify matters, that there is no friction, and that heated air be taken instead of the products of combustion, as their density and specific heat are approximately the same.

The density d of air at 62 degrees is 0·0761 and at 500 degrees d^1 is 0·0414.

If h be the height of the chimney then the pressure difference p for unit area will be $p = hd - hd^1 = h(d - d^1)$, and the height of a column of external air which will produce this pressure, acting simply by its weight, may be found by dividing the pressure by the density of the external air. Therefore if H represents the height of such a column, we have

$$H = \frac{p}{d} = \frac{h\ (d - d^1)}{d}$$

Substituting values, the total pressure P over the whole section of the chimney is as follows:

$$P = 10 \times 100\ (\cdot 0761 - \cdot 0414) = 34\cdot 7\text{lbs.}$$

and the height of a column of external air which will give the corresponding pressure per square foot is

$$H = 100 \left(\frac{\cdot 0761 - \cdot 0414}{\cdot 0761}\right) = 45\cdot 6\text{ft.},$$

as compared with 100ft. for the higher temperature.

Now the theoretical velocity of the external air entering the base of chimney under this head is

$$V = \sqrt{2g\,H} = \sqrt{2 \times 32\cdot 16 \times 45\cdot 6} = 54\cdot 2\text{ft.}$$

per second, and its weight per second for the whole chimney is $54\cdot 2 \times 10 \times \cdot 0761 = 41\cdot 25$lbs.

The movement of this air is the result of heating it from 62 degrees to 500 degrees, and as the specific heat of air under constant pressure is 0·2375, the total heat expended per second in moving 41·25 pounds is $41{\cdot}25 \times 438 \times 0{\cdot}2375 = 4{,}291$ B.T.U.

Again, one heat unit is equivalent to 778ft. pounds of work, therefore the work equivalent of the heat passing up the chimney and which serves no useful purpose in heating the water is $4{,}291 \times 778 = 3{,}338{,}398$ft. pounds.

The work actually done however is the result of overcoming a total pressure of 34·7lbs. through a distance of 54·2ft. that is

$$\text{work done} = 34{\cdot}7 \times 54{\cdot}2 = 1880{\cdot}7\text{ft. pounds,}$$

and therefore the efficiency of the chimney is

$$\text{efficiency} = \frac{1880{\cdot}7}{3{,}338{,}398} = 0{\cdot}000563.$$

That is less than six ten-thousandths of the heat expended is represented by the work done. In practice the resistance of the chimney, the cooling of the gases in their passage and other causes combine to reduce even this low efficiency. The figure ·000563 is the highest theoretical efficiency. The actual efficiency may be worked out in another way by the following method: one pound of air raised from 62 to 500° is equal to $1 \times (500 - 62) \times {\cdot}2{,}375 \times 778$ft. pounds, and the work done in raising this pound of air through 100ft. the height of the chimney is 100ft. pounds, therefore the efficiency is

$$\frac{100}{1 \times (500 - 62) \times {\cdot}2{,}375 \times 778} = {\cdot}0001235.$$

This practically represents the figure obtained in actual practice.

It is a poor fan that has not an efficiency of 50%, but in comparing the efficiency of a fan installation with the chimney, it is necessary to take into account all the losses which occur. These are the losses due to friction and to the

boiler and engine driving the fan. The resultant efficiency is therefore the efficiency of the installation, and assuming the boiler and engine to have 10 % efficiency and the loss by friction to be 20 %, we have

$$\text{efficiency of fan installation} = 0{\cdot}5 \times 0{\cdot}1 \times 0{\cdot}8 = 0{\cdot}04$$

or in other words, one twenty-fifth of the total heat expended is utilised for creating draught.

The fan efficiency therefore which allows for friction as was not the case with the chimney is $\frac{0{\cdot}04}{0{\cdot}000563} = 71{\cdot}05$ times greater than that of the chimney. In practice it is anything from 80 to 400 times more efficient.

Forced draught was first applied to boilers to increase their steaming capacity by increasing the rate of combustion, and for this purpose is largely used to-day. The principal point to aim at is the even distribution of air under the grate bars and Figs. 1 and 2 shew how this may be arranged in the case of Lancashire and Water-tube boilers respectively. In a Lancashire boiler the air is discharged by the fan into the front of the ashpit, while with Water-tube boilers it is more usual to take the air supply through the side wall and discharge it in front of the bridge.

In all cases the air must be properly admitted and discharged downwards to prevent the blast acting directly on any part of the bars. Dampers are fitted so that when the furnace or ashpit doors are opened the blast is automatically cut off, this is essential if danger of the fire blowing out of the doors is to be avoided.

The advantages of forced draught are, a greater rate of combustion per foot of grate surface with proportionate increased steaming capacity, and the fact that a lower grade of fuel can be burned economically. It also enables thicker fires to be used with greater intensity of heat, while the excess air supply is

reduced to a minimum, so that the velocity of the gases over the heating surface remains low and the maximum amount of heat is absorbed by the boiler.

One of the best methods of testing the efficiency of a boiler —apart from measuring the actual steam generated—and for estimating the economy with which the fuel is burned is to analyse the flue gases.

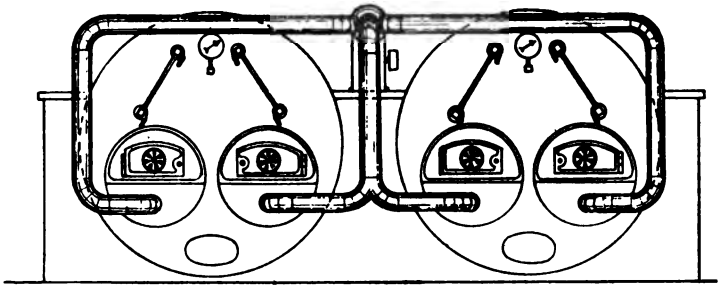

Fig. 1.

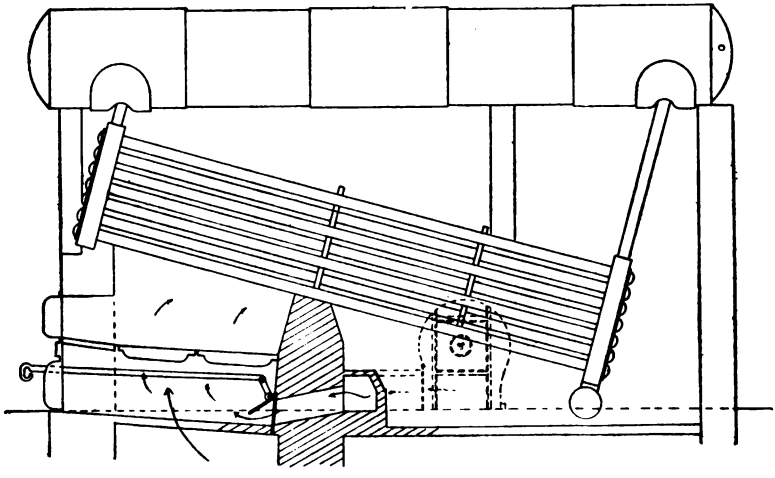

Fig. 2.

Air contains 20½% of oxygen; nearly all the remainder being nitrogen, which undergoes no change in passing through the fuel. In perfect combustion all the oxygen will combine with

the carbon in the coal, and there will be 20½ parts of carbonic acid in the gases. This is never attained in practice, but if the gases on analysis shew above 12 % of carbonic acid satisfactory results are being obtained. Almost more important than the percentage of carbonic acid however, is the amount of carbonic oxide in the gases, and anything above traces of this indicate incomplete combustion and consequently serious loss. This is due to the fact that a pound of carbon burned to carbonic acid, gives off 14,600 B.T.U., while when burned to carbonic oxide it only generates 4,400 units.

Smoke is generally looked upon as an indication that the coal is not being properly burned and so it is to a certain extent, although analyses of flue gases shew that the amount of carbon going to waste in smoke seldom exceeds 1% of the fuel burned, and the loss of efficiency through smoke is in no way so great as occurs when carbonic oxide is formed in any quantity. This explains why a chimney free from smoke may still be very wasteful, as carbonic oxide is colourless. The amount of carbonic oxide should never exceed 1% if good efficiency is to be maintained, and only that amount for a few minutes at a time.

In particularly good installations of mechanical draught, the percentage of carbonic acid in the flue gases has risen up to nearly 20 % with no trace of carbonic oxide, but any figure above 14% is very good.

One actual example of the saving in fuel and the increased steam supply obtained after forced draught had been applied may be given. Two Lancashire boilers, each 27ft. × 7ft. 6in. working 60 hours a week, and fitted with economisers, grate surface each boiler 30 square feet, burned 25 tons of coal costing 10/- a ton and were constantly short of steam. They now burn 30 tons a week, costing only 8/- per ton and can

keep up the pressure without difficulty under all circumstances, besides saving 10/- a week in their fuel bill.

The disadvantages of forced draught are that unless the installation is properly arranged, blow holes are more easily formed with bad stoking, and there is a tendency to clinker and burn the bars. These defects can all be avoided with reasonable attention and the use of a proper section of bar.

Turning now to induced draught by means of fans, there is an entirely different problem, owing to the hot gasses passing through the fan.

In a boiler the resistance to the passage of the gases is made up of the resistance of the bars and fuel, and the resistance due to friction and the inertia of the gases. It is obvious that the highest economy will result when all the fuel is completely burned with the theoretical supply of air, and all the heat abstracted by the boiler before the products of combustion are allowed to pass away, an induced draught fan will enable these conditions to be more nearly attained than any other method of producing draught.

Fig. 3 shews a typical installation where there is no chimney. A pair of separate fans are fixed above the line of the boilers, and each fan is driven by a direct connected vertical engine. A short iron stack about 30ft. high is used to discharge the products of combustion above the neighbouring roofs, and the dampers are so arranged that either fan can be shut off while the other handles all the gases. As a rule when both ranges of boilers are at work, both fans are used running at about 75% normal speed, while one fan running 25% above normal will give the required draught for all the boilers. The temperature of the gases passing through the fan averages 300 degrees with the economisers working.

Induced draught fans are frequently arranged so that the speed is controlled by the boiler pressure, and this is also done

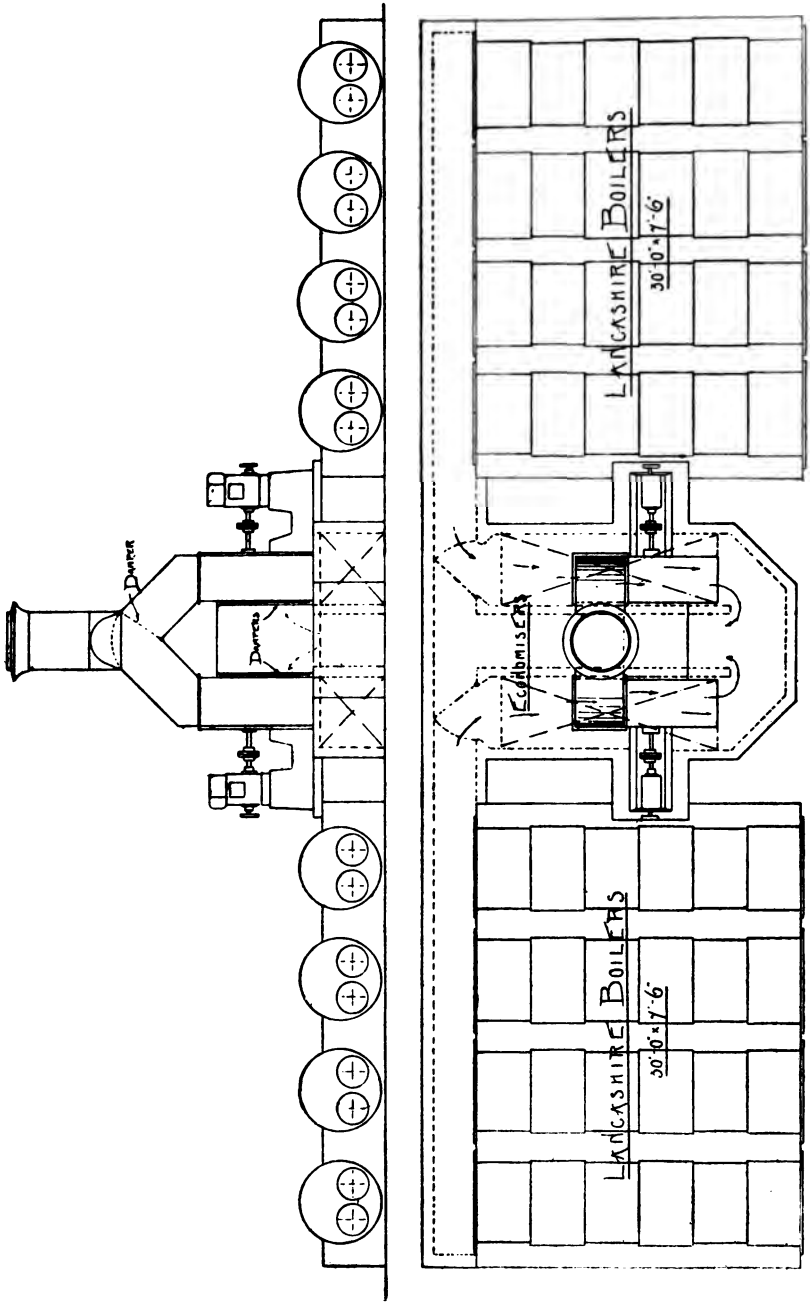
Damper
Dampers
Economisers
Lancashire Boilers
30'0" x 7'6"
Lancashire Boilers
30'0" x 7'6"

Fig. 3.

occasionally with forced draught fans. It is particularly valuable where there is great fluctuation in the demand for steam, and Fig. 4 shews the arrangement of valves. The steam

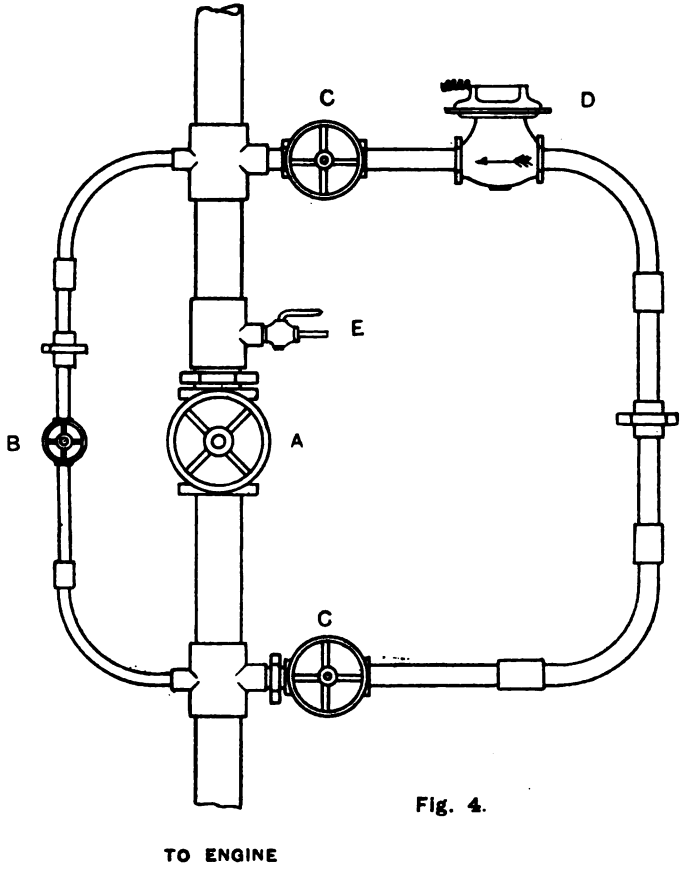

Fig. 4.

supply pipe to the fan engine has two branches taken out of it, one of which passes through a Foster or other suitable reducing valve fixed the wrong way about, and the other to a small stop valve B., both then returning to the supply pipe. In starting the fan engine steam is admitted through the main valve A,

and C and C are opened. The Foster valve D is adjusted so that with the maximum steam pressure in the boiler the required fan speed is obtained. A is now closed down and B

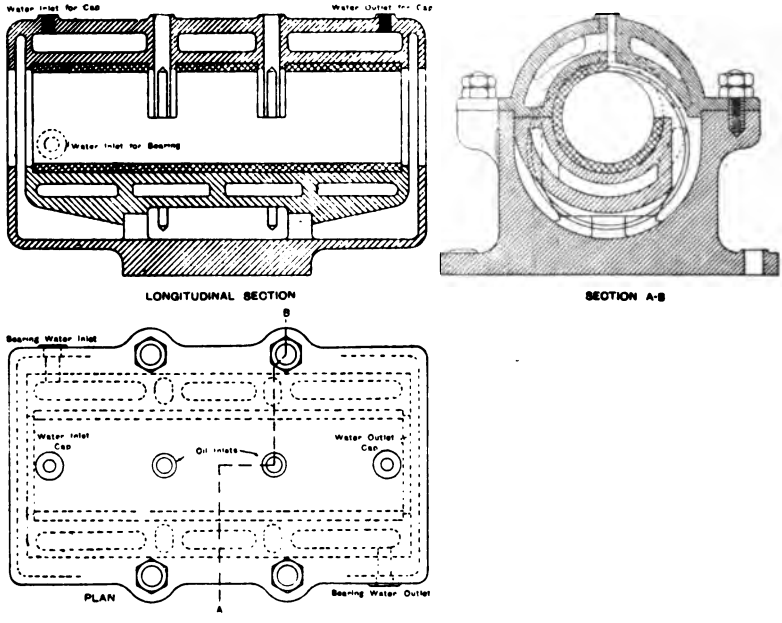

Fig. 5.

opened. As the boiler pressure drops more steam will pass through D and the fan speed is accordingly increased, giving a better draught on the fires and raising the boiler pressure again. The control is so good, and the draught required given so quickly that the boiler pressure seldom varies more than a pound either way. The small bye-pass and valve B are to prevent wear on the main valve A, which would occur were the valve A left very slightly open.

Another arrangement for giving the same control is by a curved steam pipe governing the stop valve on the supply pipe

to fan engine, and opening or closing it according as the decrease or increase of boiler pressure alters the formation of the pipe, on the same principle as the Bourdon pressure gauge.

A well constructed fan will handle flue gases at any temperature up to 700 degrees, but on account of the difficulty of lubricating the bearings at high temperatures it is usual to fit the inner bearing nearest to the fan wheel in a water jacketed casing, as shewn in Fig. 5. The water jacket is connected to a tank, and the circulation keeps the bearing cool and easy to lubricate. Both the inner and outer bearings are of the ring oiling type, and a combination view giving part cross and part longitudinal section is shown in Fig. 6.

The general arrangement of an induced draught fan is as Plate I., which shows the form of wheel used and the method of admitting the gases to the fan and then discharging them forward.

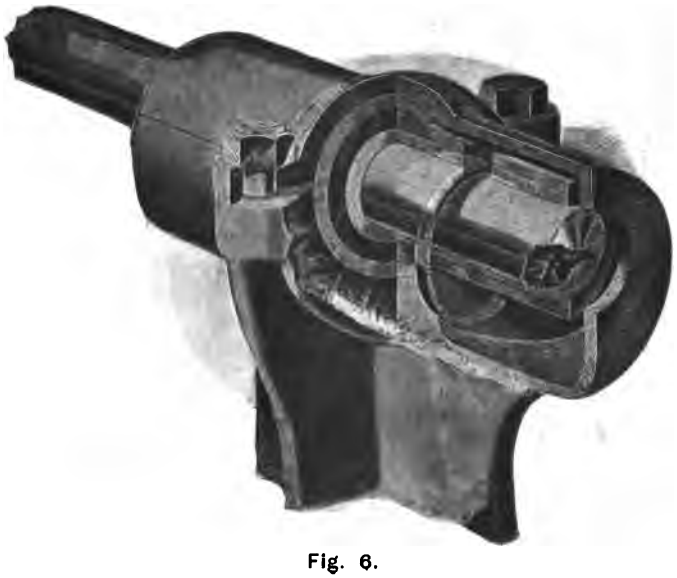

Fig. 6.

Figs. 7, 8 and 9 illustrate various methods of arranging induced draught fans in existing boiler installations, where in all cases the object should be to get as near to the base of the chimney as possible. The plant in Fig. 8 showing a new boiler is rather interesting from the fact that this boiler has not yet been put in. A mill making constant extensions found

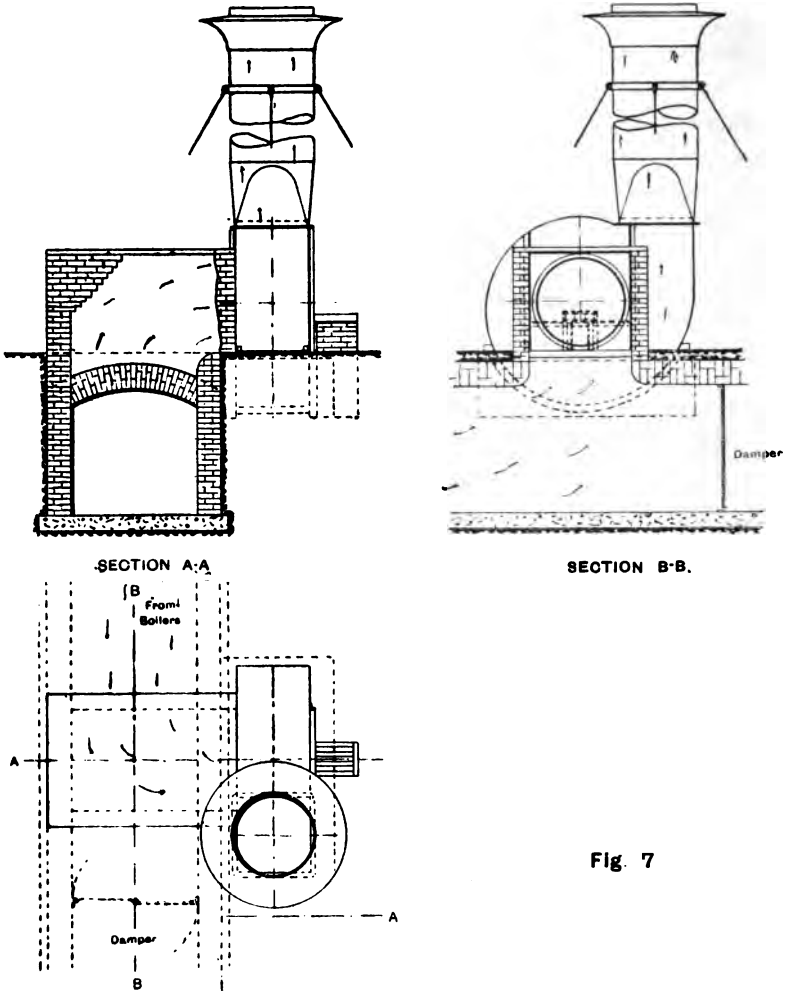

Fig. 7

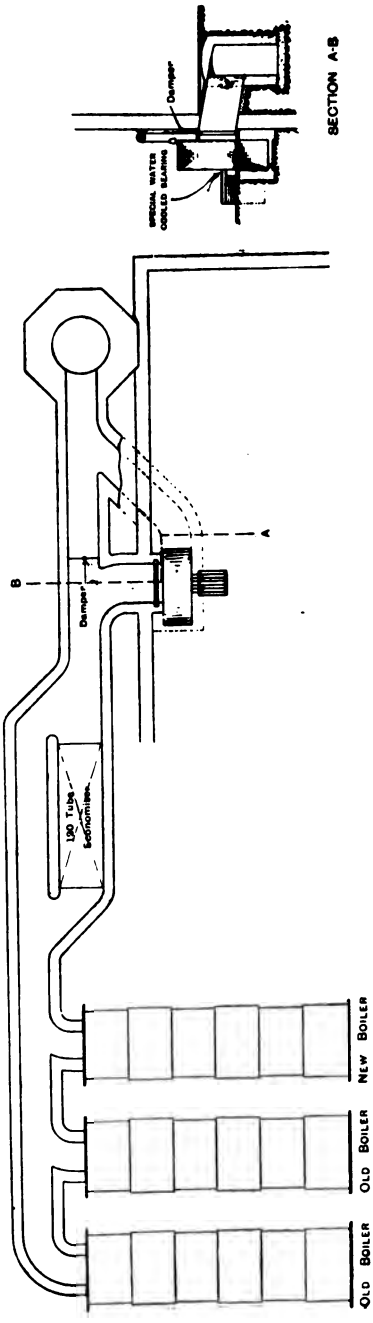
SECTION A-B
Damper
SPECIAL WATER COOLED BEARING
A
B
Damper
120 Tube Economizer
OLD BOILER
OLD BOILER
NEW BOILER

Fig. 8

themselves short of steam and boiler power. They fixed an induced draught fan, with the result that they are now making 40% more steam, burning the same amount of fuel, but slightly better quality, and their coal bill has not increased 15%. They now obtain all the steam they want, and the new boiler will not be ordered at present.

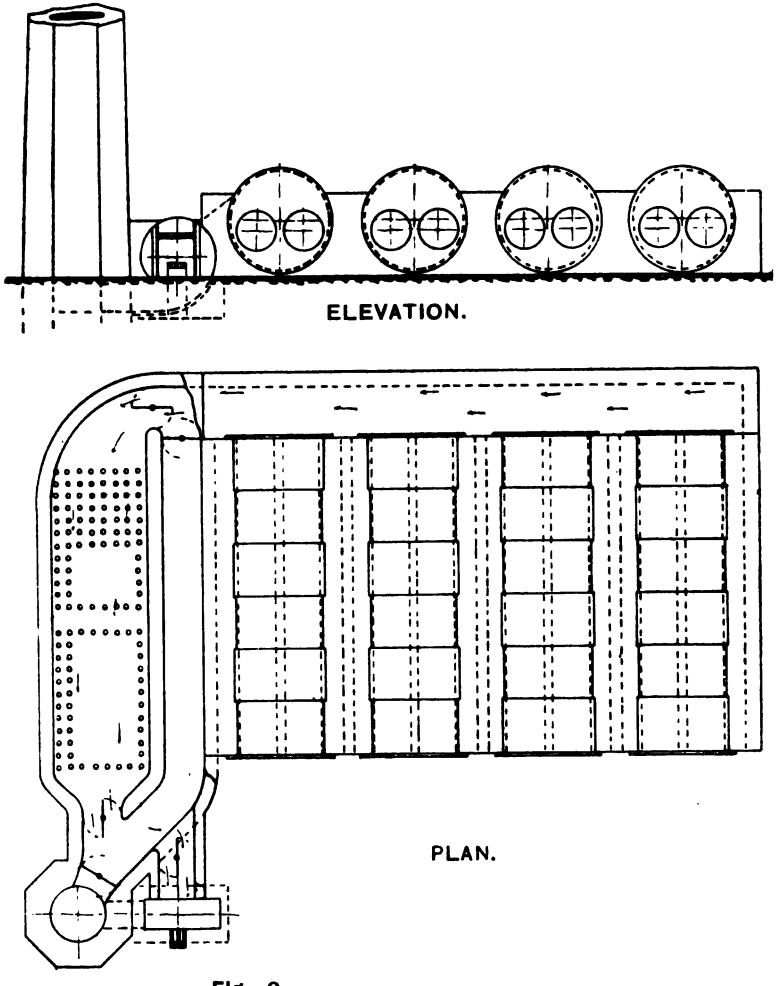

Fig. 9.

Apart from the advantage of induced draught fans where boiler power is deficient, they are now being regularly installed for economising fuel. An excellent example of what may be done is shewn by the following figures. A range of eight boilers working night and day burned 300 tons of coal a week. After an induced draught fan was applied they knocked off three boilers and now only burn 220 tons per week of the same quality of coal, while the steam generated is fully equal to the amount previously given in the eight boilers, and they are now contemplating shutting down another boiler, and increasing the rate of combustion on the remaining four to give the required amount of steam. This example shows very clearly the advantages of high rates of combustion with small grate areas compared to the amount of heating surface in the boiler and economisers, so that although a high rate of combustion and intense heat is obtained the gases are cooled down to the lowest practical limits before they escape to the atmosphere.

In another case there are three Lancashire boilers, two 30ft. × 8ft , and one 27ft. × 7ft., the larger ones being in daily use. After an induced draught fan was installed the coal consumption went down 25%, and the saving in the coal bill amounted to £3 a week, by no means to be despised in a relatively small installation, and sufficient to pay interest on the outlay many times over.

A fan is more adaptable than a chimney, and once a chimney is built it is a fixture and its capacity definitely settled. It will handle the gases from a certain size of boiler plant, but no more without great loss of efficiency. A fan on the other hand can be moved or changed about as required, and fixed in any position without expensive foundations. An increase in boiler power simply means speeding up the fan to give the required draught or for very large increases, the fan can be sold, carted away and another one of larger size put down for a tithe of the

cost of a new chimney. As a help to a chimney deficient in draft, it is particularly useful and enables economisers and other heat abstractors to be utilised to their fullest extent under all conditions. It is immaterial to a fan whether the gases be at a temperature of 60 degrees or 600 degrees, and the draught is regulated at any temperature by simply changing the speed. With a chimney the only control is by dampers which restrict the air supply. The intensity of the draught is dependent on the fire, and is lowest when the fire is low when it should be at the maximum.

With a fan and suitable control, fires can be in good working order in a few minutes after being banked all night, and the maximum draught supplied at any time.

A fan is independent of weather conditions and will produce the same steam winter and summer; it is also as already shewn much more efficient than a chimney can ever be, while the steam consumption for driving the fan never exceeds 1% of the total steam generated except in the smallest installations. It enables stronger and more intense combustion to be economically effected, and permits of abstracting all the heat from the gases, which is quite in accord with the modern tendency to greater rates of combustion with increased ratio of the area of the heat abstracting surfaces to the grate area.

A fan in addition permits of cheaper fuel being burned and combines particularly well with mechanical stokers. By burning the fuel more completely and obtaining a more intense heat, the smoke nuisance is considerably diminished, while finally the fan can be fixed in any position and, where space is particularly valuable, on top of the boilers without difficulty.

The first cost of a mechanical draught installation does not exceed the cost of a suitable chimney for the same work. It has the disadvantage however that it is a machine and consequently requires attention. It also undoubtedly does

not last so long as a well built chimney, but this question is not so serious as many imagine, as a fan will last twenty years and still be in good condition, while it will have paid for itself many times over long before then.

The last illustration Fig. 10 is not in any way connected with boilers but shews how in other lines where fuel is burned, mechanical draught is used to advantage. A brick kiln of the modern continuous type is usually arranged with a tall chimney to give the required draught for burning the bricks. The heat from the chamber which is being fired is passed forward into the chambers in front containing green bricks before it is allowed to escape, but the temperature must not drop below about 300

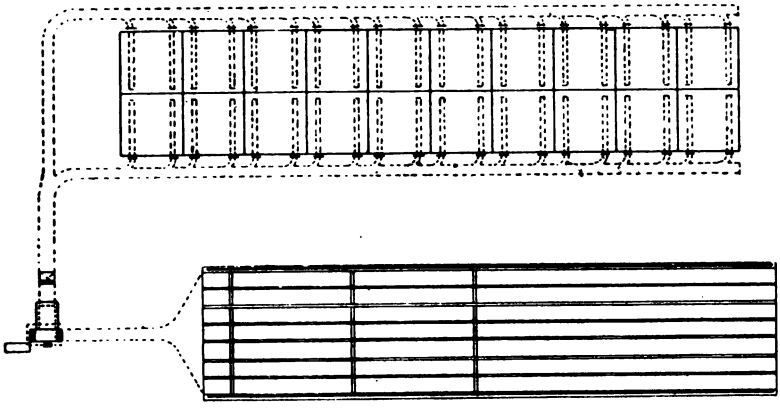

Fig. 10.

degrees, if the draught is not to be seriously interfered with. The cooling off heat from the burned bricks also passes through the chambers of green bricks before escaping.

With a fan the temperature of the chimney gases may be at once decreased to 150 degrees or less, which means that more heat is absorbed by the green bricks in front of fire. As the draught is considerably stronger, the output of

burned bricks from a given size of kiln is increased and a cheaper fuel can be burned. In one typical example a 14 chamber kiln was burned round in 14 days before the fan was fitted. They now burn round in 10 days, only burn the same amount of coal of cheaper quality, costing 1/- a ton less, the products are very much increased in value, due to the better draught burning the goods more even from top to bottom, and giving a better colour.

Mechanical draught is undoubtedly the coming question in boiler practice, and it may not be many years before the tall unsightly chimneys which now disfigure our towns and country gradually disappear and the smoke nuisance be a thing of the past.

DISCUSSION.

The PRESIDENT (Mr. E. G. Constantine) said that the paper presented to them that night was of a good practical character; it contained a number of excellent points which were interesting. He knew that many of the members present had had special experience in the subject for discussion, and some of them might not agree with Mr. Sutcliffe's ideas, but if they would give their views, he was sure that Mr. Sutcliffe would be pleased to hear on what points they differed.

He would, therefore, thank them to discuss the paper briefly.

Mr. SAM. BOSWELL remarked that he was sorry and in fact rather disappointed to find that the paper was limited to one particular system of induced draught, otherwise, he thought some of the members would have been able to say more on the subject.

In his opinion, the system advocated by Mr. Sutcliffe, was generally speaking, the only correct one. He agreed with the author in his suggestion that the induced draught fan should be placed as near as possible to the base of the chimney, but thought if the gases could only be passed uniformly from one end to the other, it did not matter very much what quantity of coal was burned. A good natural chimney draught was hard to beat for efficiency and economy, but as it was economy they wanted and not capacity, he would like to say a few words regarding this.

The author had mentioned that they could get a higher rate of combustion per foot of grate surface and burn about 35 to 40lbs. per square foot, but he would like to know how they were going to get a fair amount of saving of coal under ordinary conditions. If they burned 45 to 60lbs. of coal per square foot, then they had twice the rated capacity of the boiler, but economy was then being left behind.

Referring to the paragraph stating that in winter with chimney draught it took more coal to raise a fixed amount of steam than in summer, this, he thought, was more imaginary than real, because he had often noticed that on a frosty morning there was never a bad draught, and they did not burn any extra coal for it as had been mentioned.

Another point was respecting Carbonic Acid Gas. He remembered hearing a paper read some time ago and it was stated that they could not get good results unless they had a 12·5% of CO^2 present, but a good many were surprised to hear the member who had charge of the tests say that many a time during the whole of the day they never got more than 2% CO^2, so that what Mr. Sutcliffe said now about the 12% of carbonic acid giving satisfactory results was rather extraordinary; and in his opinion, he would say that if 7% could be guaranteed it would be sufficient to give good results.

As regards the paragraph relating to the chimney not being a movable fixture, he would advise a firm who were having an installation of boilers laid down, and who were not sure of staying in that place, to obtain a fan, and not erect a chimney.

He noticed that Mr. Sutcliffe called this a modern production of boiler draught, but he knew a firm who had no place to put up a chimney, and they had a fan put in 28 years ago, so that this system could not be called a very modern one.

He remarked that it was stated in the paper that the best way of testing the efficiency of a boiler was to analyse the flue gases; which, he thought, did not count for very much, but, what was required, was to find a way of easily separating the nitrogen from the oxygen.

With reference to the two Lancashire boilers each of 27ft. by 7ft. 6in., working 60 hours per week, only burning 25 tons per week and being constantly short of steam, in his opinion, this was a very bad case, and if he had had the management of those boilers, he would certainly have made one do the work by using a fan.

As to the building of chimneys he was afraid that many people did not believe that a chimney could be built too high or too low, but he could say that this was so, and if a chimney was black with soot round the top, they could depend upon it that it was too big for its work. He also thought that the chimneys built tapering to the top, were built the wrong way up, and the best chimneys he knew of were those which were built parallel outside and batter inside, consequently slightly larger at the top.

In conclusion, his idea was that the best way of testing the efficiency of a good fan was the difference it would save in the coal bill, and as regards forced draught and proportionate increased steaming they could not get this proportionately without economy vanishing very quickly.

Mr. T. WALTON said that he had gone carefully through the paper, and would like to say a few words on the production of boiler draught, which, in his opinion, was not a new subject. He was rather sorry to find that the author had confined his paper to one particular system, that of induced draught. As far as his experience had gone he was in favour of artificial draught, which slightly differed from the subject of the paper, but hoped that none of the members would have any objection to him making a few remarks about it.

He observed that his experience of artificial draught had been brought about by being continually short of steam first thing of a morning, although they had a good chimney, good draught, &c. They had five boilers going, and could not even have one boiler stopped, and when one had to be cleaned they stopped it at Saturday noon in order to clean it on the Sunday. Well, one could easily imagine that such a boiler could not have been very well cleaned in that time, because when he had felt at the boiler plates on the Sunday morning they were quite hot, so that it was not the fault of the men. They had also trouble with the straining of gusset stays and furnace fronts, causing leakages. The boiler fronts had been caulked so much, the boiler makers refused to caulk them any more under steam pressure.

However, one day he received an invitation to see an artificial draught arrangement, and when he arrived at the place, the boiler attendants were cleaning out fires. They were burning gas coke and slack, the consumption was not very high, being about 50 tons per week on three 7ft. 6in. diameter boilers. There was one thing that struck him as being very good, and that was, the grate or hearth was very low in the furnace, and when there was about ten inches of fire the top of the fire was only about half the height of the furnace, thus there would be a better distribution of heat around the furnace.

Ultimately, he decided to have an artificial draught put on one of their boilers, as he thought it would be useful in some things, even if it only stopped the leakages, and the wear and tear on the boilers. The result was, that it had proved a great success; and it had now been fixed to all their boilers. They had saved his firm something and they now got more work out of four boilers than they previously got out of five; thus they could now afford to have one stopped at any time for cleaning. He might add that their boilers generated about 2,400 HP, and that the steam usually fell down about five pounds on starting engines.

Mr. Sutcliffe had stated that steam could be got up very quickly; he had noticed this at their works, where he is able to get 2,600 HP on in considerably under a minute, rarely losing 5lbs. pressure, which spoke very well for getting fires up quickly.

It had been stated by the author that with these induced draught fans they could use a cheaper quality of fuel, and if Mr. Sutcliffe had brought some with him, perhaps it would have given them an idea of what could be used. He had brought a few samples with him, which were placed on the table. His firm had been trying a few loads similar to the sample, which cost 5s. 6d. per ton delivered, and although this was very cheap, the fuel was found to contain 23½% of water, so that they had now discontinued to use it.

He agreed with what Mr. Boswell had said a few minutes ago regarding the comparative cost per indicated horse-power per week, and thought that his suggestion was the best way of testing it. For instance, his plant had burned about 110 tons of fuel that week at a cost of £43 6s. 3d., and taking into account that it had been a very cold week, and steam having had to be used for heating the rooms, the above price at 2,400 HP worked out to 4·33d. per indicated HP per week.

The author had mentioned heavy fires, but did not say what he considered a heavy fire. Their fires were generally about 12 inches at starting time, but in about half-an-hour after, they got to 18 inches and were kept at that. The hearth was very low, otherwise, they would not have room for such fires in a 8ft. 2in. diameter furnace.

He remarked that plenty of steam from cheap fuel, a spare boiler, and absence of leakage from the boiler fronts had been of very great assistance in their case.

The author stated that the lower the velocity of the gases over the heating surface, the greater will be the proportionate amount of heat imparted to the boiler and the lower the temperature of the escaping gases; which he quite agreed with, but by the system advocated by Mr. Sutcliffe, he did not see how the gases could stop about the boilers when the fan drew them away.

He objected to induced draught on account of the large volumes of cold air drawn in the furnace every time the doors are opened to attend to fires or clinkering, such large volumes of cold air tending to quickly cool and strain the plates of furnaces, etc.; also such large volumes of cold air will reduce temperature of furnace and gases by the absorption of heat otherwise available for generating steam; again, the great draught induced means increased cold air leakages through defective or cracked brickwork, between brickwork and boilers, around and through soot pit frames, doors and dampers.

Mr. John Bartlam remarked that he was very pleased to hear what Mr. Boswell had said in regard to the induced draught system being the only complete system; and wished he had known that from such a source some years ago. However, he had had the pleasure of trying this method, and could say that it had been a great success. At one of the large cotton mills where he was

engineer, there were four Lancashire boilers 7ft. by 30ft. with a total indicated HP of say 1,100 to 1,200, which raised steam for cotton spinning, wool washing, dyeing, &c., and often in the early mornings steam could not be kept up sufficiently to maintain the engines at full speed. Therefore they had to stop some of the machines that could best be spared in order to get the mule spindles up to speed, and although the men fired their very best at the boilers, yet it was of no use.

At last, after a great many enquiries, they were persuaded to try one of these induced draught fans, made by a firm in Belfast. This had now been working for ten months, and their experience with it was that instead of working four boilers they could now manage with three, and previously when they had four men working as hard as they could, they had now only two men, and he would not be far wrong in saying that even these two men were sat down a large portion of the day, thus showing how much easier the steam was now kept up. They now use much more steam, and have effected a saving in coal averaging six tons a week, besides which they can always have a boiler at liberty. In addition to the load previously on the engines, the makers of the fan say it takes 10 HP to drive the fan. Taking this as being correct, they had now more power on the engines than formerly. The draught at the entrance to the economisers was about 1⅜in., whilst at the outlet or chimney end of the economisers the water gauge pressure equalled about 1⅝in., which previously had been ¾in. and 1in. respectively. The average temperature ef feed water from the economisers to the boilers was about 290° Fah., whereas before—owing to the furnace doors being open so much for forcing purposes—the average temperature of feed water to the boilers only registered 200° Fah.

Respecting chimneys, they had often experienced a great amount of trouble with the local authorities, and had been

several times before the magistrates, but since the fan was put in this was now all done away with.

He quite agreed with the author in his suggestion that the fan should be placed as near to the base of the chimney as possible, so that it could then deal with the gases as already explained by Mr. Sutcliffe.

Mr. Daniel Adamson said that it appeared to him that the author had either gone too far, or not far enough in his paper. If he had remained at the point where he recommends the fan as an aid to the chimney, and not as a substitute for the chimney, he thought most of the members would then agree with him. He thought that Mr. Sutcliffe had not gone far enough in the matter of the utilization of the waste heat in gases leaving the boilers. It was no use speaking of the advantages of low temperature for the products of combustion unless means were suggested for reducing them to these low temperatures. Probably the only satisfactory method for doing this and taking full advantage of mechanically produced draught was to use the waste heat to warm the air before it reached the fire, but the author had not referred to this in the paper. With regard to the dust and objectionable gases that would escape from the "short iron stack" suggested by the author, he had not told the meeting how the objections that would be raised by one's neighbours were to be overcome.

They had some very elaborate calculations in the paper, to prove the low efficiency of a chimney, but Mr. Sutcliffe had not given them figures proving the efficiency of a fan, but had only guessed at this, assuming losses due to friction, etc. They ought to have had the same proof of the fan, as had been given them with the chimney; perhaps in replying to the discussion Mr. Sutcliffe would give them some figures regarding

this. The temperature of 500° for the gases entering the chimney was too high, in their own case it was only 340°.

He also noticed that according to what had been said, cheaper coal could be used with the fan, but he would like to point out that this would only be an advantage when the supply was close at hand. If the carriage of the fuel to the boilers was an important item in the cost of it, then it would pay to use a better quality and save paying carriage on incombustible material. Again if they burned good coal, they would burn less, get more heat, and save the expense of carting a lot of rubbish away. There was a case mentioned in the paper where a firm had had this induced draught system put in, and who were getting 40% more steam, but they were using a better quality of coal which confirmed what he had just said, that it was cheaper to use good coal, unless the poorer coal was very close at hand.

The advantages of burning coal with a minimum supply of air had been well known for many years, but the intense heat of combustion under these conditions had been, and still remained, the chief obstacle to be overcome. There was nothing in the paper about the greater wear and tear on the boilers due to the more intense combustion.

It was mentioned that the coal consumption had gone down 25% after an induced draught fan was put in, and were saving £3 per week. He thought this was not a very large amount of coal to be burning with three boilers, as 25% meant that the firm had only been spending about £12 per week in coal, and, therefore, in this case, he would suggest that the fires were not properly covered or attended to, before the fans were installed.

As to what the author said about a fan lasting 20 years, perhaps it was meant that if the parts were renewed when required, then the fan would be there 20 years hence.

Finally, he would add that on reading the advanced copy of Mr. Sutcliffe's paper he wrote to three of the customers of his firm whom he knew had some experience of induced draught and now gave extracts from their replies. They seem to show that induced draught was not the cut and dried affair that Mr. Sutcliffe would have them believe and that any advantages it might have were more often due to exceptional circumstances than to its own particular value.

"We are in receipt of yours of the 19th inst.; regarding "induced draught for boilers, so far as we are concerned, this is "entirely in its experimental stage with us, and we regret that "we have no information to give which would be of any value to "you in your discussion before your engineering society."

"In reply to your favour of yesterday we regret to say that we "cannot give any information that will be of any assistance to "you on the subject of induced or forced draught. We tried the "former without any beneficial result whatever and, looking back "now, we cannot think why we should have tried it as we did. "We have more draught than we require—a water gauge at the "base of our chimneys shows $\frac{5}{8}$ of an inch—and we consistently "choke it down largely at our dampers. If we had tried forced "draught with the object of burning our fuel in compressed air "something might have been observed and we are doing this more "or less on our Bennis and Meldrum stokers. We find that we "can burn in that way almost double the coal consumed with "natural draught and practically as economically, allowing 5% "for the steam used to give the pressure."

"We have had the fan in work since September, 1899."

"We enclose particulars of twelve full weeks coal consumption "before we put in fan and twelve full weeks coal consumption of "same coal—Brayton Domain Slack—at the corresponding portion of the following year when the fan was at work.

"We have found practically no wear and tear on the fan and "no more dust carried into flues than formerly but considerably "more under economiser."

"We are not in a position to say that we have found the "advantages such that we would not build a chimney if we had "not one already."

"Before putting in the fan we were working under very "unfavourable conditions, our economisers being very far from "the boilers and our main flues being quite too small; at present "we are putting in a new economiser immediately behind our "boiler—to enable us to do this we have to bring boilers forward "7ft. 8in.; and we are building a new main-flue to chimney, "which we believe *will enable us to get better results without the* "*fan*. However, we shall be very pleased to give you the result "of the experiment when we get the work finished and tried."

COAL CONSUMPTION.

12 weeks without Fan.					12 weeks with Fan.			
Tons.	Cwts.	Qrs.	Lbs.		Tons.	Cwts.	Qrs.	Lbs.
31	13	2	0	..	25	18	1	14
32	7	0	0	..	26	3	0	0
32	4	1	14	..	26	13	0	14
32	12	2	0	..	27	13	3	0
32	13	1	0	..	26	13	1	0
34	0	1	0	..	26	7	1	14
32	9	1	14	..	27	8	1	14
33	10	2	0	..	27	16	1	0
33	8	0	14	..	26	4	2	14
33	5	2	0	..	26	12	1	0
33	9	0	0	..	26	3	0	14
33	3	0	0	..	26	1	2	0
394	16	1	14	..	319	15	0	0

Mr. H. N. Leask observed, that notwithstanding the notorious inefficiency of chimneys they were still being built. Only recently one had been put down by a Corporation at the cost of £6,000, which sum of money would have been sufficient to put

down three or four induced draught plants, each capable of the same work.

Having had some experience of both induced and forced draught systems, he thought that induced draught system was not as good as forced draught. This was due to the fact that with induced draught plant cold air was likely to be drawn in through all the crevices in the setting of the boiler and flues. Whereas with forced draught the tendency was to close such crevices with dust, and so prevent the loss of temperature in the setting. Further a much smaller fan could be used with forced draught. As with induced draught the gases were practically double the original volume, and were further at a considerable temperature, this involved great difficulties in the construction of large induced draught fans. His firm had put down the largest induced draught plant in England, dealing with the gases of about 50 boilers, and it had been found that large double inlet fans presented unusual difficulties in designing the shafts, &c., these difficulties had however been got over.

Further there would not be the same obstruction in the way to the chimney in the case of a breakdown, as would be the case in an induced draught plant. Where an induced draught plant broke down it was a difficult matter to get steam up readily. He remembered seeing a system of induced draught when they visited the works of Messrs. J. Brown & Co., Sheffield. This arrangement was very similar to that of Messrs. J. Howden & Co., and he thought the advantage lay with the latter, which was a forced draught system. The air was heated by means of an air-heater before entering the furnace, and was delivered both above and below the grates. Before opening the furnace door it was necessary to cut off the draught below the grates, but it was always maintained above the grates, and by an ingenious arrangement of the apertures the entrance of cold air was prevented.

The latter arrangement he thought was very desirable, because leakages and damage were often due to the action of cold air upon the heated portions of the furnace. He had experienced a case where a boiler had been placed facing the east, and whenever the furnace door was open and an east wind happened to be blowing, all the tubes in the tube-plate to the furnace started leaking; which leaks took up again immediately the cold air was excluded. He thought that the idea of having the grate set low down in the furnace an excellent one, as it permitted of more heating surface immediately over the bed of incandescent fuel. The advantages of hot air were very great, even above those of a feed water economiser. When the air was heated to say 250 to 300 degrees, that temperature was added directly to that of the furnace, but it was not the only advantage that accrued. As with hot air a smaller air supply approximating closer to the theoretical supply required could be used, and so the temperature would not be diluted to the same extent as was necessary when cold air was employed.

He was sorry that he had no figures with him at the meeting, but would communicate with the Secretary regarding these later on.

Mr. Leask subsequently sent the following summary:—

Summary of results of comparative evaporation tests of three Lancashire boilers 8ft. × 30ft with economiser of 288 pipes; under natural draught, 29th August, 1901; and forced draught Howden's hot-air system, 19th June, 1902.

Natural Draught.		Forced Draught.
100lbs.	Steam pressure	100lbs.
122°	Temperature of feed-water entering economiser.	120°
230°	,, ,, entering boilers.	Varied from 200 to 230° taken at 230° in calculation
17,960lbs.	Total water evaporated per hour.. ..	18,441lbs.

2,700lbs.	Total coal burned per hour	2,161lbs.
6·65	Lbs. of water evaporated per lb. of coal (actual conditions).	8·53lbs.
6·79	Equivalent evaporation per lb. of coal from and at 212.	8·72
13,600 B.T.U.	Total heat value of 1lb. of fuel	13,600 B.T.U.
48·3 %	Efficiency of steam boilers alone ..	62 %
5·2 %	Efficiency of economiser alone	6·8 %
53·5 %	Combined efficiency of boilers and economiser.	68·8 %
139·5 sq. ft.	Total grate surface	71·8 sq. ft.
19·35lbs.	Coal burned per sq. ft. of grate per hour.	30·1lbs.
90°	Temperature of air entering furnace ..	234°
850°	Temperature of gases leaving boilers ..	670 to 710°
550°	,, ,, ,, economiser.	450°

Mr. R. M. Neilson observed that a good deal had been said about heating surface; but they had to consider not only the amount of heating surface but how it was acted on by the gases. It did not necessarily follow that because the heating surface was the same in two boilers of different types, and the draughts the same, the gases would lose the same heat in passing from the furnace bars to the chimney in the two cases. The amount of heat which the gases lost depended on how long they were in contact with the heating surface of the boiler. If the gases were given a tortuous or circuitous course through the boiler they would give up more heat than if they were passed more directly through. In his opinion the best way of obtaining efficiency conjointly with large steam generation was to pass the gases through quickly and circuitously, but perhaps Mr. Sutcliffe would give them some information on this.

He noticed that in Mr. Sutcliffe's calculations no allowance had been made for coal, which of course passed up the chimney combined or uncombined with the air; and although the density of the gases were, as stated, approximately the

same, yet the total weight of gas passing up the chimney was of course not the same as the total weight of air supplied to the furnace. The calculations given might therefore be somewhat misleading.

Mr. T. T. Heaton remarked that he would like to ask Mr. Sutcliffe whether he had any figures showing the different advantages of the two systems of induced draught and forced draught. He had a collection of catalogues at the works, and some stated a saving of 20%, 30%, 40%, and so on, but one could not form any idea from these, as it was all a question of £. s. d. If Mr. Sutcliffe would answer the question put to him, he thought they would be able to understand clearly the advantages of the induced draught, as it was a question for discussion as to whether induced draught was better than forced draught.

He mentioned that his firm were now saving about 50% in fuel, on account of a Meldrum furnace having been put in. They had this put in on account of a boiler they previously had being too small for its work, and very often they had to stop for steam. He just stated this example to show that the conditions in which a saving is made are everything when considering the increase of steam.

The President (Mr. Constantine) said that he was very sorry that he had to bring the discussion to a close, as the subject was one of great interest to steam users.

Personally, he said he would have preferred the author to have given them some actual data describing the efficiency of boilers based on the system advocated by him. He had also expected that Mr. Sutcliffe would have referred to another point which had not been mentioned in the discussion, and that was in reference to the fact that in most cases the heat of

the furnaces was transferred to the water through a comparatively small surface in the boiler. Most of the members, who had had similar experience to his, would no doubt have noticed that if they worked with the damper nearly closed, whether the draught was mechanical or natural, they could get a very much greater economy than if they worked with the damper wide open. He therefore thought that the object in boilers should be to reduce the velocity of the gases coming in contact with the heating surface, and if it was possible to do the work with the damper nearly closed then they were bound to get economy.

He did not agree with Mr. Boswell's dictum regarding the quantity of CO^2 present, because if they took any case where the most practical combustion is obtained, and the greatest percentage of CO^2, there they would find the highest efficiency.

He would conclude his remarks by proposing a very hearty vote of thanks to Mr. Sutcliffe for his paper, and ask him to reply very briefly to the points raised, and to give them the balance of his reply in writing. He said he had received a communication from one of the members, which was rather too lengthy to read just then, but it would be printed in the discussion.

Mr. W. Wallace (J. Brown & Co.), wrote:—I have read Mr. Sutcliffe's paper with a great deal of interest, especially the portion relating to induced draught as procured by fans, and I am pleased to see he has been able to make such a good case for this system. Among the reasons given by Mr. Sutcliffe, why within certain limits it is more economical to burn at a high rate, are two that appear to the writer to be of the most importance, namely, the high furnace temperature obtainable with forced combustion and the decreased quantity of air required per lb. of coal burned.

The importance of a high furnace temperature is due to the fact that in most types of boilers fully 50% of the total evaporation is obtained in the immediate vicinity of the furnace, as there the greatest difference of temperature exists between the two sides of the conducting plates, and as the rate at which the heat passes into the water depends on this difference, the greater it is possible to get it the better, as more work will be done in the furnace while the increase in the final temperature will be comparatively slight.

Now any system which tends towards the maintenance of a high furnace temperature and a reduction in the air needed for combustion should considerably increase the economy of the boiler installation. These ends are attained by heating the air of combustion, and it always seems to the writer a waste of good opportunity to install an induced draught fan and omit an air heating apparatus, as this can be fitted at a comparatively small additional outlay.

An air heater serves the purpose of not only heating the air of combustion, but also of reducing the temperature of the waste gases so that they can be handled more easily and economically by the fan, and obviates the risk of overheating same.

Experience has proved that it is possible to raise the total air of combustion 250° Fah. above the temperature of the air in the boiler-room, and assuming an air supply of 20lbs. per lb. of coal, a simple calculation will show that this is equivalent to about 12% of the total heat in the fuel returned to the furnace, but the economy does not stop here as the ultimate effect of the hot air supply is to raise the temperature in the furnace much more than 250° Fah. owing to its combining more easily with the constituents of the fuel than cold air would do; this increased temperature acting as already explained in further improving the evaporation, so that, taking everything in consideration, an increase in the temperature of the air of

combustion 250° Fah. above the normal, means a final economy of 20%. With a Lancashire boiler having a ratio of H.S. to G.S. of 30 to 1 when burning 30lbs. on the square foot of grate, there is still sufficient heat left in the gases after passing through the air heater to make it worth while to fit an economiser, and still further increase the economy.

Mr. Alf. Cotton wrote:—I think Mr. Sutcliffe has unduly favoured the fan at the expense of the chimney. In finding the efficiency of the chimney the velocity of cold air has been calculated. The velocity of the hot gases in the chimney (and that is what we are concerned with) will be much greater as their volume is approximately doubled, and it will be $\sqrt{2g100} = 80$ft. per second. The weight dealt with will be $80 \times 10 \times \cdot 04 = 32$lbs. per second. Now the chimney is debited with wasting the difference in British thermal units contained in air at 62° and 500° respectively. This is not fair, because with artificial draught it is not practicable to reduce the temperature of the escaping gases below about 300°, and 350° is much more common. Therefore the amount of heat to be debited to the chimney becomes $32 \times 150 \times \cdot 04 = 1152$ B. T. U.'s, and this multiplied by 778 becomes 896,256 foot lbs.

The work actually done is overcoming the pressure of 34·7lbs. through a distance of 80 feet, which is the velocity per second of the hot gases, and equals $34\cdot 7 \times 80 = 2776$ foot lbs., and the efficiency of the chimney becomes $\frac{2,776}{896,256} \times 100 = \cdot 3$ per cent.

The fan efficiency appears to be much higher than could be expected in ordinary every-day working. It would be better to take it at say 30 to 40%. The boiler and engine efficiency is also too high, and would represent fair work with large units. With the little engines driving fans under somewhat adverse

conditions as to attention and so forth, it would be much safer to take 5% as the combined efficiency of boiler and engine. The loss by friction will of course depend upon the size and arrangement of conduits. Perhaps the friction loss might not exceed 20% in well designed installations, but the conduits shown in Fig. 1 are hopelessly small. Either very little work would be done or the friction loss would be ridiculously high. We can have it either way. The conduits should be at least twice the diameter of those shown. But presuming that the conduits were properly proportioned, and that we are safe in taking a friction loss of 20%, we may then take for the total efficiency of the fan draught system 35% net fan efficiency × 5% boiler and engine efficiency × 80% conduit efficiency = 1·4%. We thus see that the efficiency of the fan is but five times that of the chimney. While the various efficiencies assumed in the case of the fan are but matters of opinion, it must be quite clear that in the case of the chimney the heat-waste with which we must blame it can only be that due to the difference between the temperatures therein with and without the fan, and not the difference between the chimney temperature and that of the external air. At five times the efficiency of the chimney the fan still has much the superior position.

A big objection to the induced draught fan is that there is a great tendency to drawing in cold air through leaks, &c., after the fire, and so reducing the efficiency by lowering the percentage of carbon dioxide. With forced draught this trouble does not, of course, arise. With induced draught it is felt worst when any attempt is made to force the fires.

Such a saving as that given in the case of the 27ft. × 7ft. 6in. Lancashire boilers is very easy of attainment, and is in fact scarcely any problem at all at such a low rate of consumption. It is at much higher rates than this that it becomes difficult to guarantee increased economy with ample steam production.

I have particulars of an example where on a Lancashire boiler 26ft. × 7ft. 6in. the rate, reduced to the same times as those given in the paper, would be 36 tons per week, while evaporating about 10½lbs. of water per pound of slack. The rate mentioned in the paper is only 15 tons per week per boiler.

It is said that 20% of carbon dioxide in the flue gases has been attained. This could not be with bituminous coal, as the highest theoretically possible is only about 19%. I have only seen this exceeded in the case of destructors where but little unoxidised hydrogen is present in the fuel. 14% with bituminous coal is excellent work.

Mr. Sutcliffe replied that he was entirely in accordance with the remarks made by the President, and in answer to Mr. Boswell pointed out that it was the ordinary conditions under which boilers are now worked which required reforming. If the coal consumption per square foot was increased by forced or induced draught fans the area of grate surface was usually reduced, particularly if the boilers had previously been working under chimney draught, and in actual practice it was found that doubling the fuel consumption per square foot and reducing the grate area to one half, thus burning exactly the same amount of fuel, a properly proportioned fan will give an increase of up to 25% more steam than working on the old conditions with chimney draft, and Mr. Boswell must agree that this meant efficiency. As to the amount of CO_2 in the products of combustion the fact of Mr. Boswell not getting any CO_2 in the gases was remarkable. 7% was not a good result and in the best practice the CO_2 was nearer 16% as a regular thing.

Mr. Adamson drew attention to the statement about cheaper fuel being used with a fan and was of opinion that the carting away of the increased clinkers and dust would be expensive.

In hundreds of boiler plants at work at present with chimney draught, nothing but good coal could give them sufficient steam. With fan draught they could use a cheaper fuel and get more steam because the cost of any coal decreases more rapidly than its calorific value, and a fan will successfully burn what a chimney would not touch. As to the letter from Mr. Adamson's friends who have a chimney showing $\frac{5}{8}$in. water gauge, it was not clear why they wished to install induced draught as they did not want any more steam nor to increase the rate of combustion, and an induced draught fan would not give them any better results without they reduced the grate area so as to obtain a greater ratio of heating to grate surface. In the third instance where the flues were too small the fan effects a saving of just over one ton per day. This is fairly satisfactory, but could probably be improved upon even yet.

Mr. Leask was of the opinion that forced draught was preferable to induced draught. From a boiler efficiency point of view neither system can claim any advantage over the other, but forced draught to be most successful should be fitted along with mechanical stokers as it was most important to obtain absolute regularity in firing. For burning small anthracite coal with mechanical stokers, forced draught is certainly better than induced draught as the air pressure under the fire bars prevents particles falling through without being burned. As a general rule however and particularly where existing boiler plants with chimneys require improvement, induced draught is preferable to forced draught. The table Mr. Leask submits fully bears out the general experience with fans, and it will be noted that although the fuel consumption has gone down 539lbs. per hour, the evaporative capacity has risen 481lbs. per hour. The fire-grate is only about one-half, and the coal consumption per square foot is increased by 50 %.

In reply to Mr. Neilson it is found in actual practice that the speed at which hot gases travel through the flues varies considerably. The larger the flue, the slower the speed of the gases, which will therefore have more time to impart their heat to the boiler, but this acts another way as the larger the flue the greater the loss of heat through the brickwork. Good, economical results cannot be obtained even with powerful fans if the flues are badly restricted, and the best remedy is to increase the size of the flues. The steaming capacity may however be considerably increased by a fan, but, of course, the power absorbed for driving will be more than usual.

Mr. Heaton's queries respecting the difference between forced and induced draught have been partly dealt with in the reply to Mr. Leask. No doubt a good many people have been astonished at the disparity in figures relating to the saving effected by using artificial draught, but when it is remembered that practically no two boilers are arranged in exactly the same way this will be easily understood. In one boiler examined not long ago the main flue was only 2ft. 6in. deep by 1ft. 6in. wide at one point, although the boiler was a 30ft. by 8ft. Lancashire type. On a similar boiler in another case the main flue was 7ft. 6in. deep by 2ft. 9in. wide at the smallest point and the difference in efficiency in these two cases can be quite understood without any reference to artificial draught.

Mr. Wallace has gone to the root of the matter in pointing out the reasons for the economy obtained through burning at high rates of combustion say 30lbs. to 45lbs. per square foot per hour. Of which (i) the higher temperatures which are obtained in the furnaces with mechanical draught, (ii) the corresponding decrease of air supply, and (iii) the fact that the final temperatures of the gases could be reduced to a minimum are the most important. The essence of the whole thing is that you can burn a thicker fire, increase the ratio of heating surface

to grate surface, and control the draft to any degree at any time.

With regard to Mr. Cotton's remarks on the efficiency of chimneys it will be noticed that Mr. Cotton does not take any account of the specific heat of the gases passing into the chimney.

The efficiency of a chimney is the ratio of the useful work done in lifting the products of combustion to the top of the chimney, compared with the total useful work in the gases as represented by the heat contained in them, and is in no way dependent upon the theoretical lifting power of the hot gases.

---

1 Plate follows illustrating this Paper.

Plate I.

TION OF BOILER DRAUGHT.

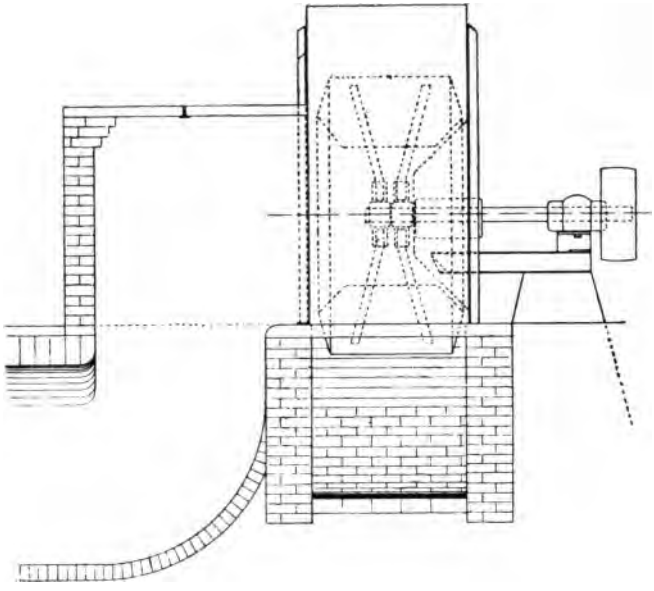

GENERAL ARRANGEMENT

OF INDUCED DRAUGHT FAN.

UNIV. OF MICH.

THE DESIGN AND CONSTRUCTION OF MODERN ENGINEERING WORKSHOPS.

READ SATURDAY, 6TH DECEMBER, 1902,

BY

MR. J. H. HUMPHRYES,

MANCHESTER.

INTRODUCTION.

In visiting the engineering workshops of this country, most of us must have been struck with the want of uniformity in design, and the difference in the materials of construction. It is a most unusual thing to find two engineering workshops constructed on similar lines, even though they may be turning out the same class of work.

One could easily account for the difference if a comparison were made between the workshops in two different countries, owing to the altered conditions of climate and light. Yet if we compare various workshops in which the same class of work is made, say in the north of England only, we still find a marked difference both in design and construction.

There are many well-known engineering firms within a few miles of Manchester, who still keep working in shops which ought to have been pulled down long ago, and which are quite unsuitable for the class of work they are producing. In many cases an old warehouse has been converted into an engineering workshop, the height from the floor to the ceiling not exceeding 7 or 8ft., no daylight being admitted into a large portion of the building, and the men working by artificial light through many days of the winter months, often with only one

gas jet to each tool; the upper portion of the room being filled with an irregular network of pulleys, shafting, and belting apparently fixed without any attempt at system or order, and which has probably never been cleaned down since the day it was installed.

Several firms have attempted to alter and adapt a workshop which has been built for one branch of engineering, in order to utilise it for a different class of work. The process is a costly one, and the result generally unsatisfactory, especially as far as output is concerned. It is too often assumed that it is only necessary to put up four walls and a roof, and that the rest may be fitted in afterwards to make the workshop complete.

In looking over many of the old foundries and machine shops, it seems surprising that such a large amount of good work has been produced under the worst conditions of lighting and cleanliness. It certainly bears testimony to the patience and perseverance of the workmen of fifteen or twenty years ago.

The chief point which we should all have in view when building workshops, is to construct these in such a manner that we may obtain a maximum output of work at the most economical rate. Each building must be so designed and constructed that the various machines may be located in a position suitable for dealing with their work, and cranes and other apparatus installed for handling it expeditiously and economically.

The size and weight of the materials to be manufactured, also the sizes of the various machines, must be carefully borne in mind, and the height and width of the shop, and spacing of the supports, must be arranged accordingly. The stanchions and girders of the structure should be arranged to carry the roof and galleries, support the side walls, and should also be constructed to support the travelling cranes, jib cranes, shafting

and other equipments; thus avoiding the necessity of introducing additional supports and framing to carry these after the main structure has been completed. This point is often overlooked before starting the building, with the result that extra expense is incurred in adding members for this purpose, but which generally interfere with the handling of the work.

If the articles to be dealt with are only small in size, it is advisable to adopt a series of small bays, as it not only keeps down the cost of the building, but also enables the work to be handled in a quicker and more economical manner, by equipping these bays with short span, quick travelling, cranes, and other appliances.

The structural requirements of the various branches of engineering are so different, that not only do the designs of the various shops in each branch differ from each other, but the construction of the same shop, say the foundry or machine shop, varies in main outlines, to suit the particular class of work to be dealt with.

During the last few years a great deal of attention has been drawn to automatic, high-speed, machine tools, with the object of obtaining an increased output and more accurate work; but it is equally important that we should bear in mind the general construction of our workshops, in order to obtain an increased quantity, and better quality of work, and to improve the sanitary and healthful condition of the shop.

Now that electric driving is coming rapidly to the front, and the value of steel as a material for construction is becoming more widely recognised, we shall probably find, in the future, a greater uniformity in the design and construction.

The items which I have chiefly dealt with in this paper are the structural portions of the work, viz: the stanchions, crane girders, floors and floor girders, roof principals, and bracing.

DIFFERENT CLASSES OF WORK.

On comparing the design of a number of engineering shops built recently, the difference in the size, and the general outline of the framing to suit each particular branch, is at once apparent.

DESCRIPTION OF ILLUSTRATIONS.

In the illustrations at the end of this paper are shown several suggested cross sections and plans for the various shops of an engineering establishment. The buildings shown include the engine and boiler-house, foundry and fettling shop, machine shop, and erecting shop, and are referred to later.

No general plans have been given showing the relative positions of the buildings to each other, as these, of course, must be set out to suit the site. The general arrangement of the shops requires the most careful consideration in each case, before the further details given in the paper can be dealt with. Owing to the introduction and increasing use of electric driving, however, some of the difficulties in connection with this have been removed, as it is now no longer necessary to place the engine-house in a central position for transmitting power by means of shafting, ropes or belts, to the various shops.

ADVANTAGES OF STEEL.

For the construction of the stanchions, girders, roof principals, and other framing, I think the most suitable material is mild steel. It is rolled in so many different sections suitable for forming into these members that there is no difficulty in building them up to almost any size or shape, to carry the heaviest loads. It is of a ductile and elastic nature, and has great power of withstanding jerks or shock without fracture. It has a high tensile and compressive strength, and is made at a comparatively low price. The quality generally used for this purpose has a tensile strength of 27 to 31 tons per square inch, with an elongation of at least 20% in 8″, and a contraction of area at point of fracture of at least 40%.

Now that the advantages of this material are being recognised there should be little difficulty in getting together a few standard types of workshops, which with slight alteration in details should prove suitable for most branches of engineering. A few suggested types are shown at the end of this paper, and will be referred to later.

ROOF PRINCIPALS.

The roof principals shown in all the illustrations are made of steel. The advantages of this over wood, or a combination of wood and iron, are many; the chief, being that the various members are much smaller, and offer less obstruction to the light, they take up less room, and they are not so heavy. The material is very reliable, and not subject to shrinkage or dry rot, like wood; while the stresses in the various members may be more accurately determined, and the sections arranged to suit.

One or two firms of constructional engineers have now adopted standard designs for this class of principal, which gives a decided advantage in accurate work and quick delivery. The sizes of the various members are calculated to bear the tensile or compressive stresses due to the load from wind pressure, weight of roof covering, snow, etc., the factor of safety usually allowed being 4. The compression members are generally constructed of tees, angles, or channels; the tension members of flat bars. In many instances the main tie bars are constructed of double channels or angles, in order to give additional stability to the roof, or to enable trolley rails, countershafts, or other weights, to be suspended from them. In many of the American workshops the whole of the members in the principals are constructed of double angles. These add very considerably to the stiffness of the principals, but also increase the cost. Some of the designs most suitable for workshops are given on Plate I.

The purlins supporting the roof covering are generally of wood, but it is advisable to adopt steel purlins of L T or E sections, as these brace the principals together better, and enable the steel erectors to complete and leave their framing secure, before the joiner and other trades, commence their work.

Longitudinal bracing should also be fixed across the main ties of the principals of large spans to prevent vibration, and diagonal wind ties should be connected to the rafter backs in the plane of the roof.

STEEL STANCHIONS.

The steel stanchions are built up in various sections, the most common form being shown in Figs. 1 to 11, Plate II. The compound stanchions in Figs. 7 and 8, are often arranged so that the line shafts may be carried through them, thus enabling the machines in the bays on each side of the stanchions to be conveniently driven from these, as shown in the illustrations of the large and small machine shops. They are also suitable for carrying the heating or ventilating pipes in such a position as to cause little obstruction, Most of the sections given are suitable for supporting jib cranes, and additional shafting girders, which may be easily attached for carrying the brackets supporting the bearings of the main or counter shafting, in the machine shop. Nearly all these sections shown are better adapted for their work than cast-iron stanchions, as they are able to bear unequal and heavy loads, and are not liable to fracture from shock. They take up less room in the shop, as the width may be considerably less than if made of cast-iron.

The Sections Nos. 4, 6 and 9, are the most suitable where it is desired to attach jib cranes to the sides, or support the crane gantry on brackets, as they are able to withstand the bending moments due to overhanging loads, the moment of resistance

on both axes of either of these sections being approximately equal.

The Sections 10 and 11 are used in many shops in the U.S.A., and many of our members will, no doubt, have noticed some of similar section at the Westinghouse Works in Trafford Park.

CRANE GANTRY GIRDERS.

It is of the utmost importance that we should have a good crane track, in order to suit the requirements of the modern quick travelling electric cranes. The girders forming the track should have a depth of at least $\frac{1}{15}$th of the span, and have sufficient lateral stability to prevent any side swinging of the crane, when travelling quickly with its maximum load. The width of the girder should not be less than $\frac{1}{30}$th of the span, unless it is connected to some other rigid member of the structure.

In determining the sizes of these girders it is often convenient, for the purpose of calculation, to assume an equivalent dead load of at least $1\frac{1}{2}$ times the rolling load for large span cranes, and twice the rolling load for small span cranes. Under these conditions the factor of safety may be taken as 4. This I should mention is an approximate method adopted only where light cranes are used, where heavy loads are dealt with greater care must be taken in the calculation of the strength of these gantry girders. The joints of the girders should have good covers, and the top flange, or web, of the girders should be securely fixed to the stanchions to prevent oscillation. In addition to forming part of the equipment of the shop, these girders act as a longitudinal stay to the stanchions.

I think many crane tracks are spoiled through using too light a section of rail. A heavy rail can be laid much truer, and will last longer and give less spring at the joint. A bridge rail of good depth and width should be used for all heavy cranes, the

flat bottom rail being only suitable for light power, or hand cranes. Great care must be taken in laying these straight and level, in order to ensure the smooth running of the crane, while the joints of the rails should overlap those of the girders by at least 18″. In many cases it is better to send the rails loose and after the girders are fixed, to mark off the holes, and drill at the site in order to ensure a perfectly straight line, thus avoiding loss of power, and reducing the wear of the crane.

Figs. 1 to 6, on Plate II. show various forms of crane gantry girders. Figs. 1, 2, and 3, are generally used for short spans, and Figs. 4, 5 and 6, for long spans.

FLOORS, AND FLOOR GIRDERS.

In considering the construction of the machine or erecting shops, it would be difficult to find a portion which presents a greater variety than the construction of the floors. The number, and variety, of the materials used to form the ground floor of a workshop is really astonishing. The kind of floor should, of course, depend upon the class of work and the weight to be handled. It is essential that we should get a regular and level floor, which will wear well, will not chip or crumble, and one that will be comfortable for the men to work on. A wood face is usually preferred for this reason, but care must be taken to prevent the damp from working through, or the floors will quickly be spoiled. Many concrete floors covered with boards have had to be taken up owing to dry rot, especially in cases where a layer of asphalt, or other damp proof material, has not been laid down.

On Plate No. III. are shown three types of ground floors, which have generally given satisfaction.

Type No. 1 consists of a bed of tarred ashes, well rammed, with timber cross bearers laid about three to four feet apart, and planks about 2½in. or 3in. thick spiked to these, the timber

being first coated on the bottom and sides with a mixture of tar and pitch.

Type No. 2 has a substratum of ashes, well rammed, with a concrete bed on top, and a layer of sand, on which wood blocks are laid on end, run in with pitch.

Type No. 3 is a very strong floor, suitable for the heaviest weights, and consists of a lower bed of rubble concrete 4in. or 5in. thick, with a layer of rock asphalt ½in. thick, and an upper layer of coke breeze concrete, to which are spiked 2½in. floor boards, creosoted on the bottom.

In a works where a high class trade is done, such as loco. or stationary engines, machine tools, electric motors, &c., it is very necessary that a good floor should be laid, and in many cases it is worth going to the expense of having planks planed on the sides and the top. A well laid floor contributes to the cleanliness and orderliness of the shop.

Three types of gallery or upper floors are also shown on Plate No. III. Concrete floors are generally adopted in these cases in preference to wood, owing to the incombustible nature of the materials, and the freedom from vibration.

Type No. 1 consists of steel joists of the requisite depth to suit the span, embedded in concrete with a layer of coke breeze concrete on top, to which the floor boards are spiked.

In *Type No. 2* the steel joists are embedded in the same manner, with wood fillets on top spaced at suitable intervals, for the purpose of nailing the floor boards.

Type No. 3. A wood floor, composed of 7in. × 2½in. timbers packed together on edge, and 1½in. floor boards. This makes a good fire resisting floor, and is fairly steady, but is rather expensive.

A cheaper floor is often used consisting of the warehouse type of wood floor joists, and one or two thicknessess of floor boards.

It is generally found, however, that it is not free from vibration, and takes up considerable head room.

A number of sections of floor girders are shown in Figs. 1 to 5 on Plate III. The Sections 1, 2 and 3 are for small spans, whereas for large spans Figs. 4 and 5 are more suitable.

The loads usually assumed on the gallery or upper floors are from about 2 to 6 cwts. per square foot, according to the nature of the work to be dealt with. The sizes and weight per foot of the girders suitable, may be found by reference to some of the maker's lists. The depth of the girder should not be less than $\frac{1}{16}$ of the span, the factor of safety generally allowed being 4.

It is advisable to arrange, as far as possible, that all the floor girders and other members, should be rivetted up complete in the maker's works, before being delivered at the site, in order to get the advantage of machine rivetting, and to enable the work to be erected in the quickest possible time.

ENGINE AND BOILER-HOUSE.

The engine and boiler-house which appears on Plate IV. is of a type suitable for a large engineering works. The engine-house roof here shown is constructed on more ornamental lines than the roofs in the other parts of the works. The building is adapted for the installation of an electric generating plant, most of the engineering works recently erected being equipped with this. To meet the demand for additional power, the building may be extended in the direction of its length, without disturbing the existing plant.

The best covering for this roof is slates, supported by boards, the boards being laid diagonally with a layer of felt on top. Provision is made in the lantern of the roof for the opening and closing of the fanlights, these being pivoted as shown, and worked by gearing from the floor. Both sides of the roof are glazed, in order to admit plenty of light, and it is advisable, in

this case, to use wired glass supported on patent sash bars. The purlins supporting the slates and glass are of angle irons, with moulded wood fillets pocketed in same.

A hand-power travelling crane is provided, as shown, for the installation and repair of the engine or dynamo. The crane gantry may be supported on arches in the side walls, or the gantry girders may be carried by means of intermediate piers, as shown.

The principals over the boiler-house are of a heavier type. In many cases the lower members are composed of tee, or double angles, in order to strengthen them for carrying the steam piping. It is advisable to avoid the introduction of woodwork as much as possible, and for this reason the slates are supported on steel angle laths, being secured with lead or copper nails. The roof is fitted with louvres, of an open fixed type.

A coal bunker of large capacity is arranged along the front, with openings on the firing floor opposite each boiler. The coal may be shot direct from the trucks into the bunker. Where wagons with hopper bottoms are available it is more convenient to arrange rail girders, so that the trucks may be run over the bunkers. The steel stanchions at the front are arranged about 18ft. centres, to support the roof and the side framing of the coal bunkers.

No drawings of the pattern shop or pattern store have been made, as the constructional framing in these buildings does not call for special remark.

LIGHT AND HEAVY FOUNDRY.

The chief buildings in which steel construction may be used to the best advantage are the foundry and machine shops. In order to illustrate these fully, I have included drawings of two examples of each.

On Plate No. V. are shown proposed cross sections and plans for a foundry capable of dealing with castings up to about 7 or 8 tons, while on Plate VII. the outlines of a foundry for turning out much heavier work are shown. The whole of the constructional framing for both of these foundries is of steel; including the stanchions, roof principals, crane girders, purlins, etc., also the girders and floor plates for the cupola stage.

The walls shown need only be made one brick thick for weathering, or as division walls between the shops, all the weight of the structure being supported by the stanchions.

The roof covering given for the foundry is slates on battens and spars, the glazing carried by means of steel or iron tee sash bars, while the purlins are composed of steel angles with wood fillets pocketed in. The louvres over main roof are of a fixed type, and in addition to this, opening fanlights are placed at each side of the buildings, to allow the hot gases and dust to be got away quickly when required.

Provision has been made for carrying the crane girders by means of brackets on the sides of the stanchions in the case of the light foundry, while in the heavy foundry the crane girders rest directly on top of the stanchions.

Light portable jib cranes may be easily attached to the main stanchions in the foundry, and can be transferred to any stanchion, as required.

In the heavy foundry the travelling cranes can handle material in any part of the heavy or light moulding shop, fettling shop, core making and brass foundry, or smithy.

In the light foundry the cranes will control the central bays only; the side bays, if necessary, being fitted with an overhead trolley rail as shown.

A good area of glass has been provided in the roof, in order to admit plenty of light, and to enable the glazing to be cleaned when required gangways are provided on each side of the roof.

Most of our existing foundries are notably deficient in light, and very few of them ever get cleaned down.

MACHINE AND ERECTING SHOP.

The two types of machine shops which I have selected for illustration are for heavy and light work, respectively. The erecting shops are conveniently placed in each case adjacent to these, so that the work may be easily conveyed from one shop to the other.

It will be noticed that the whole of the skeleton steel framing is complete, and self-supporting, so that this portion of the building may be finished before the bricklayers, joiners, slaters, and other trades, commence the clothing or weathering and will thus enable the building to be completed more rapidly.

In the light machine shop the roof is of the saw-tooth type with a north light, each of the bays being equipped with a hand crane for lifting the work in or out of the machines, and for running it down to the erecting shop at the end.

The erecting shop is of much larger span, and much loftier. This shop is equipped with an overhead electric travelling crane, and jib cranes may be attached to the stanchions where required, to assist in the erection of the work.

The line shaft is carried down the centre of each row of stanchions, and the counter-shafts hung from the crane girders, which are braced together. The machines are arranged at the sides of each bay, and are driven from the counter-shafts on each side, thus dispensing with any belts across the shop, and giving a free passage for the crane down the centre.

The stanchions in the machine shop are similar to Section 7, but are built up of channels instead of joists. The covering on the long slope of the roof is of slates, laid on boards, and felt, supported on wood fillets in angle purlins.

The steep slope on the northern side is covered with glass on patent sash bars. The covering of the erecting shop is

similar, but with the glazing arranged on each side of the roof, as shown.

The floor suggested for the machine shop is similar to Type 1, Plate III.

The covering of the heavy machine shop is like that described above, but the steel framing throughout is of a much stronger type. The stanchions are similar to Fig. 8, Plate II.

Electric cranes are shown in each bay, except the upper or gallery floor, which is for light work, and does not require the use of a travelling crane.

As the stanchions are placed at much wider centres in this shop, it is necessary to provide shafting girders to carry the main and counter shafting between the stanchions. In shops where electric driving is used, the motors may be conveniently carried on the side of the stanchions, and may drive direct, or by means of a belt on to the line shaft.

The floor girders are similar to Fig. 4, Plate III. The type of gallery floor recommended here is Type 1, Plate III., and for the ground, Type 3, Plate III.

It will be noticed that extensions may be made in the length or width of the shop without disturbing the roof, floor girders, crane tracks, or other framing, and without interfering with the manufacture of the work in hand.

The walls suggested are only 9in. thick, and are used as a protection against the weather. They do not carry any load, the weight from the roof, floors and cranes, being carried by the stanchions.

FOUNDATIONS.

The foundations for the stanchions will, of course, vary both n size and material, according to the nature of the ground, making it impossible to deal with these in a short paper, but the kind most generally used are concrete blocks, composed of

five parts of broken brick or stone, one part of sand, and one of Portland cement, which is economical, and usually satisfactory.

CONCLUSION.

It is, no doubt, a very uncongenial task for a manufacturer to have to pull down an old machine shop, in which he has spent many years of his life, in order to replace it with a new one, although he knows a modern one will allow of a considerably increased output, and repay him for the cost, and any temporary inconvenience he may be put to. Many, no doubt, postpone from year to year extensions or reconstruction of their buildings, either with the excuse that they are too busy to undertake the work, or that they are afraid the work in hand may suffer. It is unwise, however, to allow these reasons to stand in the way of a necessary and beneficial change.

In a dark, dirty, and ill-ventilated workshop, the output is necessarily low, the workmanship generally is of poor quality, and firms working under these conditions are seriously handicapped in the race for first place in the trade.

Most firms have recognised the importance of scrapping obsolete tools, and have acted upon it, but there are still a large number in this country who do not appear to have grasped the fact that the shops in which their new machines are working are altogether unsuitable for quick output and accurate work. They have evidently forgotten the teachings of the old book and have "put new wine into old bottles."

Many members present, I am sure, can call to mind a number of workshops in the district which ought to have been dismantled and pulled down years ago. Many of these shops, unfortunately, are placed in congested districts, and are so situated as to prevent extension in any direction, without incurring a very heavy expenditure in buying up the adjoining property.

It would pay most of these firms, who have an established business, to sell their old property, and build modern works on a new site to suit their requirements, where they would get an increased output at a lower cost, and have ground available for future extensions besides improving the health and efficiency of the men. Additional capital would be required in most instances, but one need not fear for the result under the new conditions.

A number of very good shops have been built in this country recently. Many of these are shown in the photographs which have been handed round to-night, and I wish to avail myself of this opportunity of thanking the various firms for sending these in order to place before you.

A comparison is often made between the workshops of this country and America, pointing out the better lighting, ventilation, cleanliness, etc. in the American workshops. The reason, however, is not far to seek, as most of the American workshops have been built in recent years, and have consequently benefitted by the experience gained in the older shops on this side.

DISCUSSION.

The President (Mr. E. G. Constantine) said that Mr. Humphryes had given them a paper that night which contained some very good and practical truths, and he had certainly gone to a great deal of trouble in getting out the various drawings, etc. He knew that many of the members there were very closely interested in the subject, and some of them had had recent experience in the erection of new works, extensions, and so forth, and he would therefore be glad to hear their views on the "Design and Construction of Modern Engineering Workshops."

Mr. H. N. Allott remarked that he thought the thanks of the meeting were due to Mr. Humphryes for his very interesting paper, and personally he agreed with most of the views given. There were, however, one or two items in which he differed from the Author, one being in regard to the roof covering, as he thought that wherever an iron roof was used, a boarded covering was certainly the cleanest and cheapest in all cases.

He also did not see much advantage to be derived from laying the roof boarding diagonally.

Turning to the question of walls he did not agree with the suggestion as to putting up a wall nine inches thick, because in most cases the local authorities would not allow them to do this, even if steel stanchions were used, and with bricks the wall would be very rough on one side, besides which there would be a large amount of dampness. If a 9in. wall were used and plastered on the inside it would do away with these objections, but a 14in. wall could be put up as cheaply. He remarked that he had no other point to discuss and would therefore conclude by thanking the author for such a practical paper.

Mr. A. Saxon said that they had listened to a very good practical paper from Mr. Humphryes, which had also been well illustrated by the photographs and drawings submitted to them that evening.

There was, however, one feature of the paper to which he took exception, and that was in the opening part where Mr. Humphryes stated that some workshops within a few miles of Manchester ought to have been pulled down long ago, but which were still being used to work in, and that the height of the floor from the ceiling was only seven or eight feet. In his opinion, this was hardly correct. They were now living in a new century and moving in very rapid times, when competition was exceedingly keen; therefore, employers could not afford to do

their work now in the same manner as 20 or 30 years ago, and if the author would admit of a little exaggeration in the expression made, he would then be able to agree with him, as he could only recollect one engineering firm about Manchester whose works were built something similar to the lines stated by Mr. Humphryes, and they had recently closed altogether.

He had nothing more to add beyond saying that the designs of the workshops shown in the paper were very good ones, and the importance of such buildings was very apparent, because they were easily enlarged as the demands for work came in. He would therefore thank the author for the very interesting paper given them that night.

Mr. H. Renold observed that he would like to echo what previous speakers had said regarding the paper.

He was well pleased with the paper, but if the author would pardon, he would like to say that to his mind the title of the paper would have been more correct had it been "the design and construction of shops for the manufacture of *heavy* machines." The construction of the shops shown by Mr. Humphryes would be quite unsuitable for carrying on the manufacture of light machines, such as sewing machines, bicycles, pistols, chains, etc. For carrying on conveniently and economically the work of the lighter class of engineering, a three, four, or five storey building, provided with plenty of elevators and solid concrete floors, would be a preferable building than any he had shown. In his own works he had adopted first a six floor building, and later on a four floor with 15ft. high rooms, and so far had no reason to repent having done so.

Workshop buildings perhaps more than any other class of buildings should be designed and constructed with due regard to what was intended to be carried on in them. This unfortunately was not always the case, and it was one of the mos

difficult things to find an architect who realized this importance, and was willing to investigate the course machine parts should take in the economic production of machines.

Amidst the great changes and progress that were nowadays made, it was not always possible to forecast precisely what machines were to be made, and especially was this the case with small machines.

Therefore the building, or rather the rooms of such buildings, should be so planned as to allow re-arrangements of machines and re-organization of workshops, stores, and offices with the least possible cost and upset. In his own business during the past 15 years, at least half a dozen times such a complete overhaul and re-organization had taken place, and had well proved the great advantages of having the ceiling so constructed that line and countershafts could be moved and altered in very short time at next to no cost. That electric motor driving, say one or two in a room, was the only correct method to be adopted under such conditions, need hardly be pointed out. The steel joists in the ceiling were so arranged from one end of the room to the other, and the line and countershaft hangers were so constructed, that they could be as easily fixed anywhere as any casting on a planing machine table.

He stated that a previous speaker had been alluding to the vexatious restriction some Corporation bye-laws were putting upon the free use of thin brick walls. There was a very easy way out of this, by making walls of steel joists and filling up the spaces between them with concrete slabs, which could be as thin as 4½in., and would give a stronger wall than 9in. bricks. Such form of construction was as yet uncontrolled by any Corporation bye-laws. To waste as little space as possible by brickwork, and still obtain a strong and solid building, so as not only to resist weight but vibration, which is a very important point with high speed machines expected to do fine and accurate work, he had

adopted a steel structure building for his latest factory now building, which is 100ft. × 100ft. four storey high. The whole building is made of steel stanchions and girders like a bridge, and those stanchions which took the place of the outer wall are covered with terra-cotta blocks, so as to make the building appear from outside like a brick structure, also to protect the rivetted stanchions from the oxidising effect of the atmosphere. With this kind of structure splendidly large windows are obtained.

When one came to discuss as to what was the most suitable form of a building for an engineering works, one had also to consider its location, whether in the midst of a city where land was dear, or in a green field in a suburb, or miles away where land was very cheap. The cost of land was however not the only question to be considered when new works had to be erected, but also the supply of workmen, whether scarce or plentiful in the neighbourhood. Then again, a central position often offered facilities in innumerable ways which outweighed all advantages of cheap land and cheap one-storey buildings, and which fully warrants a machine manufacturer to adopt multi-storey buildings, such as he had adopted in his own factories.

Mr. M. Ingram remarked that the reader of the paper had shewn them a number of good illustrations and had given them a large amount of his own practical and expert opinions and experience, which was of considerable value to each of them. There was, however, one or two statements with which he did not quite agree, and thought that Mr. Saxon had put his finger on the weak spot, which that gentleman had always managed to do with papers read in that room.

He was quite in accord with Mr. Saxon when he said that it must only have been imagination on the part of the reader in regard to the rooms being only seven or eight feet high, and

perhaps, in replying, Mr. Humphryes would give them some data whereby they could see how they were able to avoid similar buildings.

He also could not see much economy in putting up stanchions and then calling in the bricklayer afterwards, because, in his opinion the brick walls could be carried on at the same time as the ironwork was done. Another point was with regard to the plans of the iron foundry and the brass foundry, and from his experience, which was only limited, he had learnt that smaller rooms were a great deal more economical than large ones for brass foundries. He thought the reason was very plain because the castings, etc., used were very expensive, and very often a large amount of the chippings went on the floor, which in a large room would be carried about the place on the workmen's boots, etc., whereas in a small room the floor could be swept up easier and more often, and the scrapings could then be picked out from the sweepings, thus, a small saving would be effected.

As regards pulling old buildings down and scrapping them, he thought there were a number of reasons why many employers did not do this, outside financial questions, such as the disturbance of a trade, which required a great amount of consideration.

Mr. G. Saxon said that he was very much interested in the reading of Mr. Humphryes paper, which was a practical one, and he heartily agreed with the suggestions laid down in the same.

He remarked that he was sorry he could not agree with Mr. Ingram in his statement of putting up brickwork in place of stanchions, as the latter, in his opinion, were the main element, and he would only use brickwork to close in the outer parts of the building. The stanchions have also more advantages over brickwork in regard to the use of the modern electric driving, which was coming more into use every year on account of its

adaptability to fix and secure same in addition to being excellent modern crane supports.

He would also suggest that with regard to the building of a roof, before putting on the slates, a good foundation of wood and felting be placed underneath, so as to get a solid ground for the slates to rest on, and as regards the glasswork he thought that no expense should be spared to make the roof a thoroughly good one and sound in every respect, because it was very annoying when leakages occurred through the drying and shrinking of the wood. The roof should be more closely watched than any other portion.

His idea was that a wooden floor was the best, although he had no doubt but what the concrete floor had many advantages. The latter created a great amount of dust, and they had heard reports that it was not altogether satisfactory to the workmen, whom they had also to consider.

He would conclude by advising those who intended to build new works or extensions to pay particular attention to the points in Mr. Humphryes paper.

Mr. H. N. Leask observed that he had listened with great interest to the paper read by Mr. Humphryes. There was one point in his opinion which the author had not given sufficient prominence to, and that was: The necessity for stiffening the frame of the building. What struck him most when visiting the works of the Westinghouse Co. was the extraordinary precautions taken to stiffen the building in every direction, and in fact an examination of almost all the American and Continental shops shows that precautions have been taken in this direction. It is absolutely necessary where shafting, jib cranes, etc. are carried by the roof or by the frame of the shops that the frame, etc., should be stiffened both horizontally and vertically, in order to obviate the possibility of shafts and travelling cranes binding and getting out of line. These precautions were almost entirely

wanting in shops erected in England, and that it is very difficult to get owners to spend money in this direction.

He remembered an instance where his firm had quoted for large steel buildings to a specification, which laid down definite loads to be carried, wind pressures to be allowed for, and stated permissible stresses, etc. The matter was gone very carefully into and a design submitted in agreement with the conditions. They however, were not fortunate in securing the order, and on enquiring the reason were told that other firms had submitted tenders in which the weight of the buildings was from 30 to 40 % less than that quoted for by his firm. He maintained that the conditions could not have been adhered to by the other parties in preparing their designs.

As regards the 9in. wall:—As it was not capable of withstanding the effect of wind pressure alone, it was absolutely necessary to brace such a building in the plane of the tie-rods, as well as the vertical plane of the trusses. It is usual to find roof trusses designed with a tie-rod capable of transmitting tension only. It is well known that considerable compression is introduced into these tie-rods at times due to the combination of a wind and snow load. Further, most text-books deal only with the stresses produced by the vertical component of the wind; whereas in high buildings or shops, the horizontal component should be considered, and when so considered, it is found that the so called tie-rod becomes a compression member.

He remembered seeing a building in the North of England which had been erected without such stiffening, and which had subsequently to be guyed by means of steel ropes to anchors formed of concrete blocks in order to maintain it in an upright position.

Mr. F. Prout said he would like to ask Mr. Humphryes whether he could recommend a galvanized iron building, and whether he

thought it would resist the weather. He quite agreed in the suggestion that all works, if possible, should be on the ground floor level, because it was mucb cheaper and better for all concerned. He would finish by thanking the author very much for the interesting paper, from which he had derived some valuable information.

Mr. R. T. Cooke observed that Mr. Saxon stated there were no engineering firms around Manchester which ought to have been pulled down long ago, but there were perhaps cotton machine shops. He was not so egotistical as Mr. Saxon in regard to the works of Manchester, he thought they could be too jealous of them, and get so self-satisfied as to allow other countries to overtake them. No doubt there were works, and engineering works round Manchester which did require taking down, and did deserve a whipping in that respect for not moving and keeping up to date. He quite agreed with the suggestion made in the paper that it was better to have the one-storey system where the land is cheap enough.

He said that he had a return given him every week relating to the cost of the castings per cwt., and also a return of the labourer's rates, which upset him every Wednesday, because he could see money going which might easily be avoided if their works were built on modern lines. The cost for a labourer alone was about 2¾d. per cwt., and when 150 tons of castings were made per week they could easily imagine the amount of money to be saved if the crane could be run up and down the shop as suggested in the paper, because the crane would be able to carry the material and dispense with half the labourers at the very least. The saving would be much increased if the material could be carried in a sequence from point to point.

He also agreed with the author in regard to the health of the men, as he had often experienced cases in their works at certain

seasons of the year, when the men stayed away on account of illness, and when he asked the men what had been the matter with them they replied they felt sick and heavy, this no doubt arising from want of a sufficient ventilation; in a modern shop this would be avoided.

He might say he did not come down to discuss little points in the paper, such as rooms being built seven or eight feet high as their friend Mr. Saxon had done, because he thought when authors put these matters in their papers it was only done to emphasize the subject, but he had noticed one thing which was omitted from almost every paper, and that was, there were never any examples given of the comparative costs of the systems with which the papers dealt. For instance, taking last week's paper given by Mr. Sutcliffe, he would have been delighted had he given them some approximate cost; and would also have been more delighted had Mr. Humphryes done the same, because he was sure it would be of great assistance to most of the members.

Mr. Yates remarked that he would also like to mention the last suggestion given by Mr. Cook in regard to the approximate costs, as he was rather annoyed to find in the last paper that no comparison had been made, and if Mr. Humphryes could give them some idea it would help him very much.

Mr. R. T. Cooke remarked that in regard to roofing they had a considerable amount of glass roofing at the Ashbury Carriage Works in two of the shops, which had been finished just recently, and in these shops, from the ridge to the gutter, there was 20ft. of glazing divided into two lengths, and screwed down with very good thumb screws.

Mr. Ashford said that the paper was certainly one of considerable interest, and thought that most of them must feel

their indebtedness to the author for it, because they were all brought face to face with the question of improving their buildings.

For instance, he was at present engaged in making re-arrangements, and finds that the roof is not strong enough for the purpose required. It was not a new one, and could not be called an old one, and until a short time ago it had to be fixed up by strapping, etc.

They had heard a good deal about high-speed steel, etc., being used, and when new machinery is put down they certainly would have to consider whether they would have a new roof put up or not.

There was also the question of the health of the workmen, and in designing workshops the ventilation should certainly never be overlooked, because if you have not proper heating appliances the men get chilled and cannot do the work very comfortably, and consequently they run to the fire or stove when the foreman's back is turned to warm themselves, thus losing time. He therefore thought that they ought to find some remarks relating to ventilating and heating of workshops in a paper of this character.

Another point was that in the majority of workshops they required gas pipes, water pipes, etc., for which they could seldom find provision. For instance you want a pipe to take the water to the grinding stones, and also one to carry away the water which has been used.

As regards flooring he thought the right thing to use was timber, because a concrete floor made dust, and was also very tiring to the ankles when walked upon for long time.

He said it would be extremely helpful to him if the author would kindly reply to the questions raised by him.

It was important that this large amount of glass roofing should be kept very clean, but the cleaning of these had been

made very simple by the screws mentioned above, and all the men had to do was to turn the piece of glass over he was cleaning, and then turn it back again when cleaned, and so on until they were all finished. He also mentioned that the method was a good safeguard against accidents. He thought it was some additional security against rain, etc., by painting the glass along the edges, say half-an-inch from the framework, but a good deal of damp was prevented from getting through by using a good quality of putty.

He might state that he had noticed when contractors came to do any glazing for them they had leakages sooner than when their own workmen had done a little glazing.

Another advantage of the glass roofing was that when the weather was hot it was only a slight operation to remove a few of the skylights.

The CHAIRMAN said that he was quite sure that those members who had stated that Mr. Humphryes deserved the thanks of the meeting for his excellent paper, had meant what they said, and it contained a number of good points to those who were contemplating putting up buildings or making alterations. They had also heard a very good discussion which had materially increased the value of the paper, and although some diversity of opinion had been expressed, he did not think it was a difficult matter to reconcile those opinions.

Mr. Renold had stated that the title of the paper given by the author was scarcely a correct one, and had also remarked that such buildings would not be suitable for the manufacture of light articles such as pistols, bicycles, chains, etc.; although the manufacture of these were very interesting, yet he (the Chairman) thought these should be described as mechanical trades and not as engineering; therefore, in his opinion, the paper had been accurately described by the title given.

The important question of erecting or extending buildings required very great consideration, as there were so many circumstances to be taken into account regarding capital, labour, cost of land, &c., and only those who were thinking of embarking on it could determine the best way for themselves, but it was papers of this kind which helped them very considerably to decide on the best means to be adopted.

He observed that it was a fact that there were works existing at present engaged in the engineering industry, in which there was room for great improvement both as regards light and health, which would conduce to economy in production.

He said he would also be glad if Mr. Renold would oblige them by sending a sketch of the hangers which are so easily fixed, in order that they may be embodied in the transactions.

In concluding he remarked that he had very much enjoyed the discussion, and although it might be a little pride on his part, he thought that the discussion that evening was equal to those found in any other Engineering Society.

He therefore proposed a very hearty vote of thanks to Mr. Humphryes for his paper, which was seconded by Mr. Saxon, and carried unanimously.

Mr. Humphryes, in responding, thanked the members very much for their kind remarks on the points in his paper.

In reply to Mr. Saxon who had taken exception to the paragraph in the paper where it was stated that there were workshops in Manchester in which the ceilings were only seven or eight feet high, he could assure him that only a week before his paper was written he had visited a well-known shop in the district, not above a mile from that room, where the ceiling was as stated above, and it was impossible for a tall man to walk under the shafting, with his hat on, without stooping.

With regard to the roof covering of the heavy and light foundries mentioned by Mr. Ingram, the spars were stated barely on account of the cost, and in laying the boards diagonally this assisted in preventing vibration.

He thought he would leave the matter regarding the question as to whether engineering or textile shops were built the best for Mr. Cook and Mr. Saxon to settle themselves.

Mr. G. Saxon had referred to the glazing of the shops and the leakages, and as regards this point he would strongly recommend the use of the patent glazing without putty, and although they are more expensive, if you compare the cost of repair between the patent glazing and those used with putty, the former would be found much cheaper than the latter.

With reference to the question of Mr. Prout as to whether a galvanised iron cover would be a suitable one, he thought it would answer the purpose for a temporary building, but not for a roof of modern engineering works which had to stand for a greater number of years.

Mr. Cook and Mr. Yates had asked for a comparative cost of various shops, but as these differed from each other so much, it was impossible to give the prices without knowing the loads required. He quite agreed with Mr. Ashford's suggestion as to the ventilating and heating, and that the workman must be considered during the winter months.

As regards the roofing and ventilation mentioned by Mr. R. T. Cooke, he thought the subject too large to be dealt with that night on account of it being so varied, and would therefore conclude by thanking them again for the kind way in which the paper had been received.

---

9 Plates follow illustrating this Paper.

C
HA
C
FT
Y

UNIV. OF MICH.

01

OF MODERN ENGINEERING W

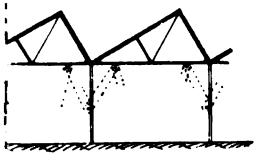

2

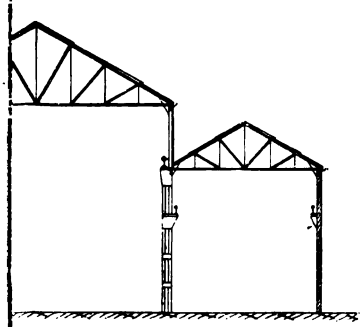

5

F WORKSHOPS.

47TH Annual Report

OF THE COUNCIL,

1902.

MANCHESTER:
HERALD & WALKER, POOL FOLD CHAMBERS, OFF CHAPEL WALKS.
1903.

COUNCIL.

1903.

President:

MR. E. G. CONSTANTINE.

Vice-President:

MR. HENRY HODGSON.

Treasurer:

MR. JAMES WALTHEW.

Trustees:

MR. T. ASHBURY
SIR W. H. BAILEY
MR. J. WEST
,, HENRY WEBB
MR. J. NASMITH.

MR. D. ADAMSON
,, G. KIERNAN
,, R. MATTHEWS
,, W. TAYLOR
,, A. WALSH
MR. H. N. BICKERTON
,, G. DANIELS
,, G. SAXON
,, L. F. MASSEY
,, S. BOSWELL

Librarian:

MR. R. GASS.

Secretary:

Mr. FRANK HAZELTON.

Annual Report of Council,

1902.

The Council have pleasure in presenting the 47th Annual Report of Proceedings.

To the membership roll during the year have been added—

32 Members.

and after taking into account the loss by death, resignation, and erasure, the total number of names of all classes on the roll amounts to 515, as against 501 in the previous year, namely :—

25	Honorary Life Members.
225	Members.
265	Members (entitled to Financial Benefit according to Rule 7.)
Total 515	

Upon reference to the Financial Statement, as certified by the auditors, it will be seen that the balance standing to the credit of the Association, after payment of all accounts due up to the 31st December, amounts to £5,404. 4s. 4d. as against £5,102. 15s. 7d., at the close of the preceding year, thus showing a surplus of £301. 8s. 9d. on the year's working.

Superannuation Fund.—At the commencement of the year there were seven superannuants and subsequently another was added, but owing to two deceases the present number is six, who are receiving a weekly allowance of 8/-

It is with regret the Council have to record that during the year death has removed the following members, brief memoirs of whom are appended.

Dixon, Samuel - - - -	Manchester.
Fletcher, William - - .	Salford.
Hollings, A. - - - -	Manchester.
Holmes, William - - -	Sheffield.

Johnson, Henry - - -	Manchester.
Muir, Alfred - - - -	Do.
Robinson, John - - - -	Leek
Schofield, James - - -	Manchester.
Shaw, Francis - - - -	Do.
Vickers, William - - - -	Do.

The following gentlemen have resigned their membership during the year :—

Bunting, W., - - - -	Manchester.
Dobson, J. T., - - - -	Do.
Williams, James - - -	Do.

The following gentlemen have ceased to be members during the year :—

Mason, R. - - - - -	Barrow.
Mc.Ewan, J. - - - -	Manchester.
Price, W. - - - - -	Do.
Ogden, John - - - -	Do.
Bolton, A., - - - - -	Do.

During the year, in addition to the ordinary meetings, the following Excursion and Social Gatherings have taken place, brief accounts of which are included herewith :—

Jany. 25—Anniversary Dinner. Attendance 185.

June 12.—Visit to Sheffield : inspection of the Works of Messrs. Sir John Brown & Co. Attendance 120.

Oct. 11.—Inspection of the Works of The British Westinghouse Electric Co. Attendance 250.

The Council have pleasure in recording that the revision of the rules which had occupied their attention for a considerable time during the past year, after being submitted for consideration to the Annual General Meeting, when they were referred back for further modification, were practically unanimously adopted at the subsequent January Meeting, and apparently, so far their working has proved satisfactory.

During the year a suggestion was made to the Council in regard to the desirability of disinterested tests being made as to the capabilities of the new tool steels for high speed cutting. The question was subsequently considered by representatives of the Council and the Engineering Committee of the Municipal School of Technology, with the result that a Joint Committee was formed to carry out an extensive series of experiments therewith.

Messrs. E. G. Constantine, H. N. Bickerton, Geo. Daniels and Daniel Adamson represent the Association on the Joint Committee, Mr. Adamson acting as Honorary Secretary.

It may be added that Messrs. Armstrong, Whitworth & Co. have generously lent a suitable lathe, and are providing free of cost the materials operated upon.

It is hoped that the results, which will be of considerable value, will be published during the year in the form of a paper read before the Association.

At the final meeting of the Council for the year the communication undernoted was submitted from the President (Mr. E. G. Constantine), in which he offered to the Association the sum of £150 for the provision of a gold medal annually for presentation to the readers of papers complying with certain conditions.

17, St. Ann's Square,

Manchester, *Dec. 4th, 1902.*

Dear Mr. Hazelton,

In order to increase the usefulness of our Association I consider it would be desirable to present a Gold Medal annually to the reader of the paper, which in the opinion of the Council, is considered to be the most meritorious.

To provide for the purchase of such a medal I have much pleasure in offering to the Council the sum of £150, to be invested in the

names of the Trustees, and the income from which to be devoted to the above purpose.

If, as I hope will be the case, the Council accept my offer I suggest that the medal be known as "The President's Gold Medal."

Kindly bring this matter before the Meeting to be held this evening, and oblige,—Yours faithfully,

E. G. CONSTANTINE.

The offer was unanimously accepted. The Council desire now to record their appreciation of Mr. Constantine's generosity, not only for its intrinsic value, but as evincing his interest in the progress and well being of the Association.

Papers Read and Discussions held during the Year.

Jan. 11.—"Inaugural Address" by the President, Mr. E. G. Constantine, "The Training of Apprentices."

Feb. 8.—"The Application of Portable Machine Tools." Discussion introduced by Mr. J. R. Ingham.

,, 22.—"Intensified Gas Lighting," by Mr. Jos. Nasmith.

Mar. 8.—"Efficiences of Electric Cranes," by Mr. R. Matthews.

,, 22.—"Silo Granaries for Modern Flour Mills," by Mr. Jas. Whitaker.

Oct. 25.—"Milling Cutters," by Mr. S. N. Brayshaw.

Nov. 8.—"Steam Pipes," by Mr. C. E. Stromeyer.

,, 22.—"Boiler Draught," by Mr. W. L. Sutcliffe.

Dec. 6.—"Modern Engineering Workshops," by Mr. J. H. Humphryes.

The Council, in conclusion, desire again to express their cordial thanks to those members and friends, who have read papers or contributed to the discussions during the year.

ANNIVERSARY DINNER.

The Forty-fifth Anniversary Dinner was held on Saturday evening, January 25th, at the Grand Hotel, Aytoun Street, under the presidency of Mr. E. G. Constantine (President of the Association). There was an exceptionally large gathering. The guests included the Lord Mayor of Manchester (Mr. Alderman Hoy) and Mr. Stewart, a representative of the British Westinghouse and Electrical Manufacturing Company, Limited. After the dinner the usual toasts were submitted. The toast of "The King" was proposed by the President.

Mr. Henry Webb, in proposing "Our Imperial forces," referred to the part played by the engineering profession in connection with the war in South Africa. He praised the British soldier for courage and humanity, and expressed his conviction that no war in ancient or modern times had been carried on more humanely than this.—(Applause.) He was glad, he said, to testify that Tommy Atkins was a brave, cheerful, obedient man, sometimes sentimental, but always kind to women and children.—(Applause.) There were ninety "Bury lads" at the front, and one of them had stated that at the concentration camp with which he was associated, women and children were treated as they ought to be; they had good tents, while the soldiers had to sleep on the bare ground. They had also had the best of food, and when the commissariat had broken down through the Boers capturing British convoys they had had sufficient, while soldiers had gone without food for two days together. The war, Mr. Webb added, would be over when the British flag floated over the whole of the South African Continent—the flag that meant freedom for white and black, equal and just laws for all, freedom to worship God according to

to the dictates of conscience; the flag which meant free trade, which always brought in its train peace and civilisation; the flag that meant the "open door," for at the close of the war England would say to every nation "Come and help us and see who can do most to uplift humanity."—(Applause.)

Lieutenant-Colonel Crook, commanding officer of the volunteer corps of Royal Engineers, in responding, expressed his belief that unless the volunteer force became more truly an efficient branch of the military forces of this country some form of compulsory military service would be necessary. He drew a distinction between compulsory military service for a brief period, so that men might be fitted to bear arms in defence of their country, and conscription, which involved the the uncertainties and unfairness of the ballot. The conditions of warfare had so changed that preparation beforehand was absolutely essential. The military authorities were alive to the fact that we must in future be much more carefully prepared with our military arrangements, and the time had come when the volunteer force must be put on a new footing or else the nation must be prepared to go in for compulsory military service. It was a platitude to say the volunteer force was the only reason why we had not compulsory military service in this country. "Personally," Colonel Crook added, "I am in favour of a compulsory service—(cries of dissent),—but I recognise that it will be a long time before the English people are educated up to it—(applause),—and meanwhile we must make the best use of the force which we have. I think the bugbear, as it is, of compulsory military service is one which time will completely remove. I cannot help thinking that a great deal of the curious reception which Mr. Rudyard Kipling's poem brought forth is due largely to that repugnance which the English people have to compulsory service."—(Cheers.)

The toast of "The Houses of Parliament" was proposed by Mr. J. WALTHEW and responded to by Mr. JOHN WEST. Mr. CHARLES DAY then proposed "Municipal Institutions."

The LORD MAYOR, in his reply, spoke of the excellent work done by the representatives of the public on municipal bodies and of the way in which municipal tasks were extending. Referring to the new Technical School, he said the attitude of engineers had changed very considerably in regard to the work of that school. To-day the school stood better in their esteem than it did a few years ago, and he welcomed most warmly the feeling that was growing, that the managers of the school could assist the engineering industry in all its various developments. —(Applause.)

Mr. JOSEPH NASMITH, in proposing success to the Association and to the engineering and allied trades, said he was going to show they were not in that parlous condition which so many people, and more especially the daily press, would have them believe. They heard a great deal about the German and the American invasion. Well, there was kinship between the British, Germans, and Americans, and Great Britain need not be surprised that from Germany and the United States there should come the most strenuous competition. On that point he had to say for this country, old as it was, and much maligned as it was, they were not afraid of any competition.—(Applause.) There had been a great deal of talk lately about the American invasion. Well, if eighty millions of people, of the same race and with the same virility, could not produce better results than thirty-five millions, they ought to be ashamed of themselves.—(Cheers.) At the same time there was no reason why the old stock should be afraid of what the new stock could do, and he protested against the national habit of self-depreciation which extolled our competitors and to some extent debased themselves. If the habit of

depreciating ourselves and of telling other nations that we were behind in the race did not cease other peoples would come to believe us, and then there was an end to our prosperity. There was no truth in the statement that England could not do things as well as the Germans or the Americans. As regarded engineering work, Englishmen could do quite as well as anybody else; in fact, they ought to do better, because one of the chief features of the American workers was that they went in for quantity and speed rather than quality. That being so, he submitted, the time had come when Englishmen should cry their merits as loudly as they had hitherto proclaimed their demerits. —(Applause.)

The PRESIDENT. in his response, endorsed the views expressed by Mr. Nasmith as to there being no cause for fear that England would not be able to hold her own in the commercial war. He also urged the desirableness of the Association of Engineers being officially represented on the governing body of the Technical School.

Mr. MATTHEWS, Chairman of the Manchester Association of Employers in the Engineering Trade, also responded to the toast.

The health of the guests was proposed by Mr. T. ASHBURY, and responded to by Mr. STEWART, of the British Westinghouse Company. Mr. Stewart said that of the materials used in the construction of the works in Trafford Park 80 per cent. came from the United States and the remaining 20 per cent. was got in England. Why? Because the goods could be imported for 40 per cent. less than they could have been purchased at in Great Britain. How this was he did not know. That was a question which his hearers were probably better fitted to answer than he was. In regard to English methods of work, Mr. Stewart said he thought English manufacturers made things to last too

long. In America they made things to last ten years, because experience had taught them that there was a revolution in manufacturing forms every decade. As for the firm he represented, he had to say they had come over here to be one of the many. "We want to be one with you."—(Applause.)

OPENING MEETING OF DISCUSSION SESSION.

VISIT TO THE BRITISH WESTINGHOUSE WORKS.

The Opening Meeting of the Session was inaugurated on Saturday, the 11th October, by a visit to the new works at Trafford Park of the British Westinghouse Electric and Manufacturing Company, Limited, which had been freely thrown open for inspection.

The members, to the number of about 250, were received at the works by Mr. Loud, the general manager, and conducted through the various extensive shops. The entire laying out of the several portions of the works had scarcely been completed, but in most departments manufacturing operations had been commenced, and although owing to the fact that the visit took place during the afternoon the shops were not in actual work, the party found more than sufficient to deeply interest them during the two or three hours spent in passing through the different sections. The works proper are located in six buildings, all of rectangular form, and arranged side by side in the order most convenient for securing straightforward work, and occupy some 130 acres of land. The buildings are of steelwork bricked in. Steel columns set on heavy concrete foundations, and tied with cross girders, support the steel roof spans.

After a thorough inspection of the works the members returned to Manchester and sat down to tea at the Grand Hotel.

Mr. E. G. Constantine, the President, in proposing a vote of thanks to the British Westinghouse Company and their

staff, including Messrs. Loud, the general manager, Mitchell and Avel, for the facilities they had afforded for the inspection of the works, said the members had that afternoon had one of the greatest treats they had experienced in connection with the Association in the visit they had been enabled to pay to the British Westinghouse Company's works. Whether the Company would be able to fill their extensive works with profitable orders was a question on which perhaps they need not enter; they could not, however, but admire the courage they had shown in putting down the immense capital that had been required for the erection of the works, and he for one hoped that courage would be rewarded. In his opinion the establishment of this large concern was of more than local importance. It would necessarily prove very beneficial to Manchester, but the introduction of new methods of engineering at the works was a matter of national interest. If the company were successful in the new systems of work they were adopting, English employers would be compelled to look into the matter, and the result would be a very general levelling up, of not only the methods of work, but the workmen themselves employed in the engineering trades. Possibly individual firms would suffer, but it would be a benefit to the engineering trades as a whole.

Mr. T. Ashbury, in seconding the proposal, expressed the hope that what they had seen that day would tend to strengthen the bonds of sympathy between that country and the United States. He thought the invasion of American enterprise would tend to improve engineering practice generally, and that Manchester especially would benefit by the developments now taking place.

Mr. C. B. Avel, assistant to the general manager of the company, briefly responded, and expressed his regret for the unavoidable absence of Mr. Loud and Mr. Mitchell.

LIBRARY.

The Association exchanges Transactions with the following:—

American Institute of Mining Engineers.
,, Society of Mechanical Engineers.
Canadian Society of Civil Engineers.
Engine, Boiler, and Employers Liability Insurance Company.
Franklin Institute, America.
Gas Institute, Incorporated.
Institution of Civil Engineers of England.
,, Engineers and Shipbuilders in Scotland.
,, Mechanical Engineers.
Iron and Steel Institute.
Liverpool Engineering Society.
Manchester Geological Society.
,, Literary and Philosophical Society.
Midland Institute of Mining, Civil and Mechanical Engineers.
Mining Association and Institute of Cornwall.
Mining Institute of Scotland.
North of England Institute of Mining and Mechanical Engineers.
North-East Coast of Engineers and Shipbuilders.
South Wales Institute of Engineers.
Society of Engineers.

The following Publications are received periodically:—

Cassier's Magazine.
Colliery Guardian.
Fielden's Magazine.
Page's Magazine.
Engineer.
Engineering.
Iron and Steel Trades' Review.
Marine Engineer.
Mechanical World.
,, Engineer.
Practical Engineer.
Textile Mercury.
,, Recorder.
,, Manufacturer.

REPORT OF EXCURSION.

VISIT TO SHEFFIELD.

The summer excursion took place on Thursday, June 12th, when the members, to the number of about 120, visited the extensive works of John Brown & Company Limited, Sheffield, which had been kindly thrown open for their inspection.

The members were received at the works by Mr. Ellis, junr., and Mr. E. Middleton, Secretary of the Company, and in several parties were conducted through the various shops by representatives of the general staff. Unfortunately, at the time of the visit, the works were only very partially in operation, the steel section and armour plate shops being practically idle waiting for Admiralty orders, the placing out of which has evidently been delayed possibly as one result of the recent pressure of the South African War. An opportunity was, however, afforded for an unrestricted tour through all departments of the works, which afforded much matter of interest to the members. Amongst specialities which attracted attention was the Ellis and Eaves patent system of induced draught, a large installation of which, for 30 boilers, has been put down in the works.

On the conclusion of the visit the members adjourned to the Royal Victoria Hotel, where tea was served. Before the proceedings closed,

The President (Mr. E. G. Constantine) said they could not leave Sheffield without heartily thanking their hosts of the day. Although the conditions prevailing at the time of their visit had not been so favourable as could be desired, yet the visit had proved one of great interest to all. Unfortunately Messrs. Brown were not just now as busy as they would like to be, or as the members would like to have seen them. They would, he was sure, all join in passing a hearty vote of thanks to the firm for allowing them to visi the works, coupled with the name of Mr. Ellis, junr., and the members of the staff who had shown them through the various departments.

Mr. Henry Webb very cordially seconded the motion. It was, he remarked, always a great treat to visit Sheffield and see some of its manufactures. They had heard a good deal about automatic tools of late, and the subject was often discussed as if there was only one place in the world where automatic tools could be made, and that place was America. He had nothing to say against America. In England we had ungrudgingly thrown open our shops to our American friends, who had thus been able to see all that was

being done in this country. In America they had followed, and by opening on green soil had perhaps gone one better. He thought, however, they had no longer any need in the States to handicap English engineers with a 45 per cent duty, put on a handsome profit, and then taunt us that we did not change our tools often enough. There was no country on the face of the earth that could beat Sheffield in the matter of automatic tools and apparatus, nor was there any country that could make as good steel for speed cuts, and, in fact, for all purposes, as was being produced in Sheffield. In this department Sheffield was quite in the front, and if they wanted good steel they must go to Sheffield to obtain it. Further, the very finest armour plates and the finest forgings for propeller shafts, etc., were being produced in that important industrial centre, which had always been to the front and still kept abreast of the times with its special manufactures.

Mr. Thomas Ashbury, in supporting the proposal, expressed the pleasure it had given him to see so many evidences in the works which coupled them with the names of members of that Association. Many of the principal tools were, in their design and production, evidences of the skill and the brains of men who had been connected with their Association for years past. They were also proud to see that the leading firms of Sheffield were still keeping to the front in meeting the increasing requirements of the times, and that extensions were being carried out and new plant put down on the most modern lines at enormous cost.

The vote of thanks having been most heartily adopted,

Mr. Ellis, junr., in responding, said reference had been made by Mr. Webb to the introduction of automatic machinery. This was a very important consideration for a large works, as the failure to pay for such machinery to start with involved great extra cost in wages subsequently. He might mention in this connection that they were handling steel ingots to the extent of 20,000 tons annually at an average cost for labour of 4s. per ton, and this was the result of automatic labour-saving appliances. A short time back when the exigencies of the Admiralty necessitated a pressure of work they had obtained the best tools they could find from makers in various parts of the country, and had expended something like £70,000 in fresh equipment, which was largely distributed over the country, although a great proportion of it found its way to the Manchester machine tool-making firms. Their constant endeavour in the equipment of their works was to keep abreast of the times, and there was no doubt a good deal that required to be done in an old-established works like their own to keep well to the front.

In those works ten years ago there was no steam pressure beyond 50lb., and two years ago there was no electric power in the works. Last year the shareholders allowed them to spend £100,000 in further extensions and new developments, and it would perhaps not be going outside the mark to say that £50,000 scarcely represented what it was necessary to spend per annum to keep their works to the fore with the progress of engineering science.

OBITUARY.

Samuel Dixon.—In Mr. Dixon the Association has lost a Member who practically since his election as a member in 1877 till nearly the time of his death worked earnestly and unremittingly for the Association's welfare. During these intervening years he has held the offices of Auditor, Member of Council, the Presidency during the years 1888 and 1889, and finally that of Trustee. He contributed several papers to the transactions, on the Conservation of Energy, Modern Machine Tools, Accuracy in Mechanical Construction, and finally on the Machine Tools at the Paris Exhibition. He was born at Marple on the 3rd of September, 1849. Having been educated at Elnor Lane School, Whaley Bridge, he was apprenticed to the late Samuel Brooks, of Gorton, Manchester. He remained there only a short time and then went to Messrs. Kendall & Gent, Machine Tool Works at Salford. During his apprenticeship he devoted his leisure hours to study, and attended the evening classes at the Manchester Mechanics Institute and Owens College. As the outcome of these studies he succeeded in securing a Whitworth Scholarship, the first of his year. This success entitled him to a course of three years study at Owens College, during which he matriculated, and passed the first examination for a degree of B.Sc. He then returned to Messrs. Kendall & Gent, as Works' Manager, and in 1880 became a partner. From that time he travelled a good deal on the Continent in the interests of his firm. Of recent years he was

prominently associated with the Manchester Section of the Enginering Employers' Federation of which he was elected President in 1899. He was keenly interested in Technical Education, and succeeded in establishing a Continuation School at Marple. He was also a Member of the Marple Urban Council from 1893.

He died in London on the 17th January, 1902, aged 52, and was interred at Marple in the presence of a large concourse of sorrowing friends.

William Fletcher was elected a Member of the Association in 1886, and took considerable interest in the proceedings, though owing to the state of his health he was unable to attend the Meetings. He was connected with the Eagle Foundry, Salford, and was one of the earliest promoters of the Ship Canal movement.

He died on the 29th November, aged 65 years.

Alfred Hollings was elected a Member in 1885, at that time being connected with the Steel Nut and Tube Co., Openshaw.

He died at Buxton, 16th September, aged about 56 years.

William Holmes was elected a Member in 1868, and for a great many years held important positions at the works of Messrs. Beyer, Peacock & Co., Gorton, and Messrs. Cammell & Co., Sheffield.

He died July 30th, aged 77.

Henry Johnson was elected a Member of the Association in 1888, when he was employed by Sir Joseph Whitworth & Co., Openshaw.

He died on the 20th April, aged 64 years.

Alfred Muir was the fourth son of the late William Muir, Engineer, founder of the firm of Messrs. Wm. Muir & Co., Engineers' Tool Makers, Manchester. He was born on the 29th May, 1840, at Pimlico, London, where his father was engaged at that time as manager for Mr. Bramah, the inventor of the celebrated Bramah lock and of the important improvements in the hydraulic press, which made it commercially useful, which before it was not.

Later on in June, 1840, the late Sir Joseph Whitworth, then Mr. Joseph Whitworth, induced Mr. Muir, Senior, to leave Mr. Bramah's employ and join him at his works in Manchester. In this connection, after making and working out several important inventions, he left him and started business on his own account in Manchester, in 1842.

The subject of this memoir, therefore, was brought up in Manchester, and after completing his education at the Chester College, of which the late Rev. Arthur Rigg was then the Principal, he served his time in his father's works.

He then, to gain experience, worked for some time as a journeyman mechanic at Messrs. Penn's Marine Engineering Works, Greenwich.

On leaving that firm, he was appointed manager of his father's works, and when his father retired from the concern, he succeeded him, and eventually, on its being converted into a private limited company, he was appointed chairman and managing director of the company, which position he held at the time of his death.

Alfred Muir, like his father before him, took great pride in turning out work only the best of its kind, both in finish and accuracy of workmanship.

He patented several of his inventions, notably Improvements in Cutters for Milling, in Couplings for Drilling and Milling Machines, and in Capstan Slide Rests for Lathes.

He was lately selected by the War Office as a Member of the Screw Committee appointed by them to make experiments and report on a Standard Screw that should be adopted by the country.

He took no prominent part in politics or municipal work, but devoted himself unremittingly to his business.

He was elected a Life Member of the Association in the year 1872, and died at Harrogate on the 10th May, 1902.

John Robinson was the son of a banker at Skipton, where he was born, in March, 1823, and received his earliest education at the Skipton Grammar School. Thence he was sent to a physical-science and general school in Manchester, conducted by Charles Cumber, who was an intimate friend of John Dalton, the originator of the atomic theory in chemistry. His boyhood thus came under the joint influence of Dalton and of Peter Clare, whereby his mind may possibly have been turned to the subjects of which he afterwards obtained so thorough a grasp. After further study at the Wakefield Proprietary School, he was was apprenticed at the age of sixteen to Richard Roberts, of the firm of Sharp, Roberts & Co., locomotive engine builders, Atlas Works, Manchester. After the dissolution of this partnership in 1843, he joined Messrs. Sharp in the firm of Sharp Brothers & Co., which in 1852 was changed to Sharp, Stewart & Co., on the accession of the late Mr. Charles P. Stewart, who was the same age as himself. Being a practical workman in the fullest sense, Mr. Robinson took entire charge of the workshop department, diversifying this supervision by numerous business visits to the Continent, where he made the acquaintance of many of the leading locomotive engineers.

In 1863, when the firm of Sharp, Stewart & Co. was converted into a company, he became Vice-Chairman and afterwards Chairman of the Board of Directors. When in 1888 the

business had outgrown the Manchester premises, the locomotive and machine-tool works were removed to the Clyde, and amalgamated with the Clyde Locomotive Works at Springburn, Glasgow. Here the active participation in their control, from which he had retired some sixteen years earlier, passed into the hands of his son, Mr. John Frederick Robinson.

In 1867 he took up his residence at Westwood Hall, which he purchased, with 700 acres of land adjoining. Here he thenceforth lived, except when latterly wintering at Torquay for the benefit of his health. In 1869 he became a county magistrate, and later deputy lieutenant. In 1882 he filled the office of high sheriff of Staffordshire. In matters of local government and education and other interests he took an active and prominent part.

He was elected a Life Member of the Association in 1880, and died July 9th, 1902.

James Schofield was elected a Member in 1867, and for a considerable portion of his career was employed with Sir Joseph Whitworth & Co.

He died December 8th, aged 79.

Francis Shaw was elected a Member of the Association in 1877. He served his time at the Haigh Foundry Co., Wigan, and for a considerable number of years previous to his death was proprietor of the Corbett Street Iron Works, Bradford.

He died June 11th, 1902, aged 50.

William Vickers was elected a Member of the Association in 1863, and for a many years past lived a retired life in the Isle of Man.

He died 27th September, aged 87.

TREASURERS GENERAL CASH ACCOUNT, for the year ending 31st December, 1902.

Dr. (Including Superannuation Fund Account.) **Cr.**

1902.				£	s.	d.
Jan. 1.	To Balance as per last Report			5,102	15	7
to	„ Contributions and Entrance Fees			718	0	0
Dec. 31.	„ Interest from Mortgages on Properties	£129	7 8			
	„ „ Leeds Corporation 3½% Stock	19	18 10			
	„ „ Manchester Corporation 3½% Loan	17	1 10			
	„ „ Bank	4	1 4			
				170	4	8
				£5,986	0	8

1902.				£	s.	d.
Jan. 1.	By Rent—Grand Hotel			20	0	0
to	„ Secretary's Salary	£65	0 0			
Dec. 31.	„ Librarian's „	10	0 0			
				75	0	0
	„ Superannuation Allowance			149	12	0
	„ Funeral Allowances:—					
	Shaw, Francis	£10	0 0			
	Holmes, William	10	0 0			
	Vickers, William	10	0 0			
	Schofield, James	10	0 0			
				40	0	0
	„ Printing and Lithography of Transactions	£107	14 0			
	„ Binding of do.	20	9 6			
	„ Member's Lists	21	4 0			
	„ General Circulars and Miscellaneous Work	28	0 6			
	„ Stationery	7	15 6			
				185	8	6
	„ Delivery of Transactions			7	15	0
	„ Annual Dinner Expenses			7	19	0
	„ Tool Steel Experiments			4	0	11
	„ Library Insurance Premium			0	6	0
	„ Expenses Opening Meeting Session			8	5	5
	„ Council and Sub-Committee Expenses	£14	5 8			
	„ Postages, Circulars, and Correspondence	45	16 0			
	„ Sundries	23	12 10			
				83	14	1
	„ Cash invested in Properties	£3,550	0 0			
	„ „ „ Leeds Corporation, 3½% Stock	600	0 0			
	„ „ „ Premium on do.	90	6 6			
	„ „ „ Man'ter Corp'tion, 3½% Loan	700	0 0			
				4,940	6	6
	„ Cash in Bank	£420	7 1			
	„ „ Treasurer's hands	35	6 4			
	„ „ Secretary's „	8	4 5			
				463	17	10
				£5,986	0	8

Audited and found correct,

W. INGHAM,
E. MARSHALL, } AUDITORS.

15th January, 1903.

SUPERANNUATION FUND ACCOUNT, for year ending 31st December, 1902.

Dr. (Included in General Account). **Cr.**

1902.		£	s.	d.
Jan. 1.	To Capital invested as per Rule passed December, 1901	5,000	0	0
Dec. 31.	,, Twelve Month's Interest on above Capital Invested as per Rule	170	4	8
		£5,170	4	8

1902.		£	s.	d.	£	s.	d.
Jan. 1 to Dec. 31.	By Superannuation Allowances:—						
	Mr. John R. Wolstenholme	20	16	0			
	,, William Holmes (deceased)	12	0	0			
	,, John Dutton	20	16	0			
	,, James Schofield (deceased).	19	4	0			
	,, J. G. Cochrane	20	16	0			
	,, J. Meller	20	16	0			
	,, J. Errock	20	16	0			
	,, R. Greenough	14	8	0			
					149	12	0
	,, Balance to Credit of Superannuation Fund Account				5,020	12	8
					£5,170	4	8

Audited and found correct,

15th January, 1903.

W. INGHAM,
E. MARSHALL, } AUDITORS.